**19th January, 2005**

# Pseudo Channel-Cut Monochromator at 8-ID-I: A Design Report

Suresh Narayanan, Alec Sandy and Deming Shu

## Abstract

An XOR instrumentation project was awarded in December 2003 to build a pseudo channel-cut monochromator for the I-station at 8-ID beamline. The proposed monochromator will replace the existing channel cut monochromator which has proved inadequate because of the impossibility of polishing the crystal faces, lack of energy tunability over a wider range and the inability to vary the x-ray energy bandwidth with the use of asymmetrically cut crystals. The proposed monochromator would be built with the aim of preserving the brilliance of the x-ray beam.

## 1. Scientific Justification

The experiment station 8-ID-I uses a double-bounce Ge(111) channel cut monochromator in order to produce a coherent beam with the appropriate longitudinal coherence length. The monochromator must also preserve the beam brilliance by having highly polished diffracting faces. Unfortunately, this has not proved possible with either (i) the current 8-ID-I traditional channel-cut design or (ii) a more recent channel-cut crystal designed in collaboration with the OFM group at the APS, a design that was supposed to facilitate polishing of the diffracting faces but did not succeed (data presented in the proposal for XOR instrumentation competition for FY2003). The new monochromator will address all of these shortcomings.

## 2. Conceptual Design of Pseudo Channel-Cut Monochromator

Mechanical design of the monochromator was commenced in collaboration with Deming Shu.

The features of the design are:

- Sine-bar drive mechanism for the combined pitch motion of the two crystals (based on Deming's design of 2-BM Double Multilayer Monochromator) **(Figure 1: 1c)**.
- Sine-bar is driven by an in-vacuum UHV compatible high resolution (< 50 nm) linear stage from Nanomotion Inc. that would allow eliminating the vacuum forces arising from transmitting motion through the bellows and allows for a compact design. The successful application of this stage is also of interest to other beamlines and CNM.
- Flexure-based weak link structure for fine tuning the pitch of the second crystal relative to the first crystal driven by a combination of in-vacuum picomotor and piezoelectric transducer (based on Deming's design of UNI-CAT analyzer) **(Figure 2: 2a, 2c)**
- Flexure-based weak link driven by an in-vacuum picomotor for the roll of the second crystal relative to the first crystal **(Figure 3: 3b)**
- Vertical or horizontal reflection geometry without changing the height of the beam on the first crystal.
- Tunable energy range of 5.5 – 10 keV with either Ge(111) (higher bandwidth) or Si(111) **(Figure 2: 2b)**
- Water-cooling to the first crystal (bottom cooled)
- Capability to use asymmetrically cut crystals to increase the x-ray energy bandwidth
- Installation on a separate motorized optical table so that we can easily switch between monochromatic and pink beam **(Figure 1: 1a)**

Currently, the mechanical design incorporating the above aspects has been nearly completed. Figure 1 shows the mechanical drawing of the entire assembly mounted on an optical table. Figures 2 and 3 show the details of the internal assembly. A tentative time scale of the progress to date and further work to be carried out is shown in Table 1.

## 3. Risk Analysis

- **Risk:** Installing the monochromator on an optical table separate from the rest of the experiment may cause relative vibration instabilities due to temperature gradients. **Mitigators:** We do not see any impact in the E-station where XPCS measurements have been carried out successfully in this configuration.
- **Risk:** Adding water cooling to the monochromator may induce some vibration. **Mitigators:** We plan to implement gravity-fed water flow for cooling the first crystal to minimize vibration. This scheme has been working successfully at various beamlines including 8-ID-D.
- **Risk:** The UHV linear stage used for sine-bar mechanism is the first of its kind to be tested at the APS. **Mitigators:** A multi-axis stage based on the same concept from the same vendor is running successfully in Chemistry Division at Argonne for the last 2 years. Moreover, the stage has been tested at 8-ID in a test chamber for a base pressure of $<1 \times 10^{-9}$ Torr after a mild bakeout at 100ºC for 12 hours. Control system integration to test the motion of the stage is nearly complete and performance tests will be carried out soon.
- **Risk:** The flexure based weak-link structure has not been tested for UHV so far. **Mitigators:** UHV compatible glue will be used and care will be taken to avoid virtual leaks. The weak link structure is being prepared currently and we will perform vacuum checks in a test chamber.

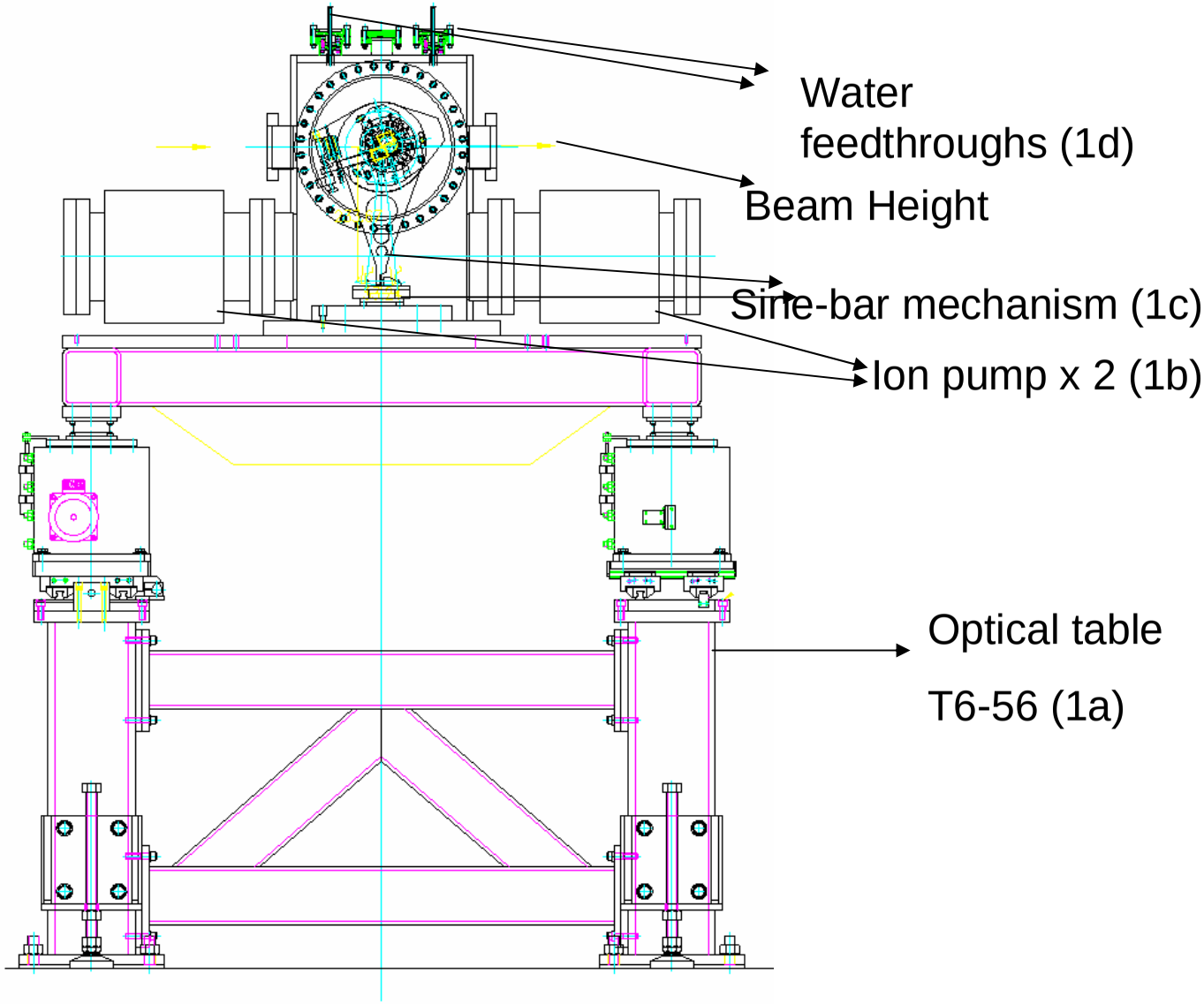


Figure 1: Mechanical drawing of monochromator assembly and the optical table

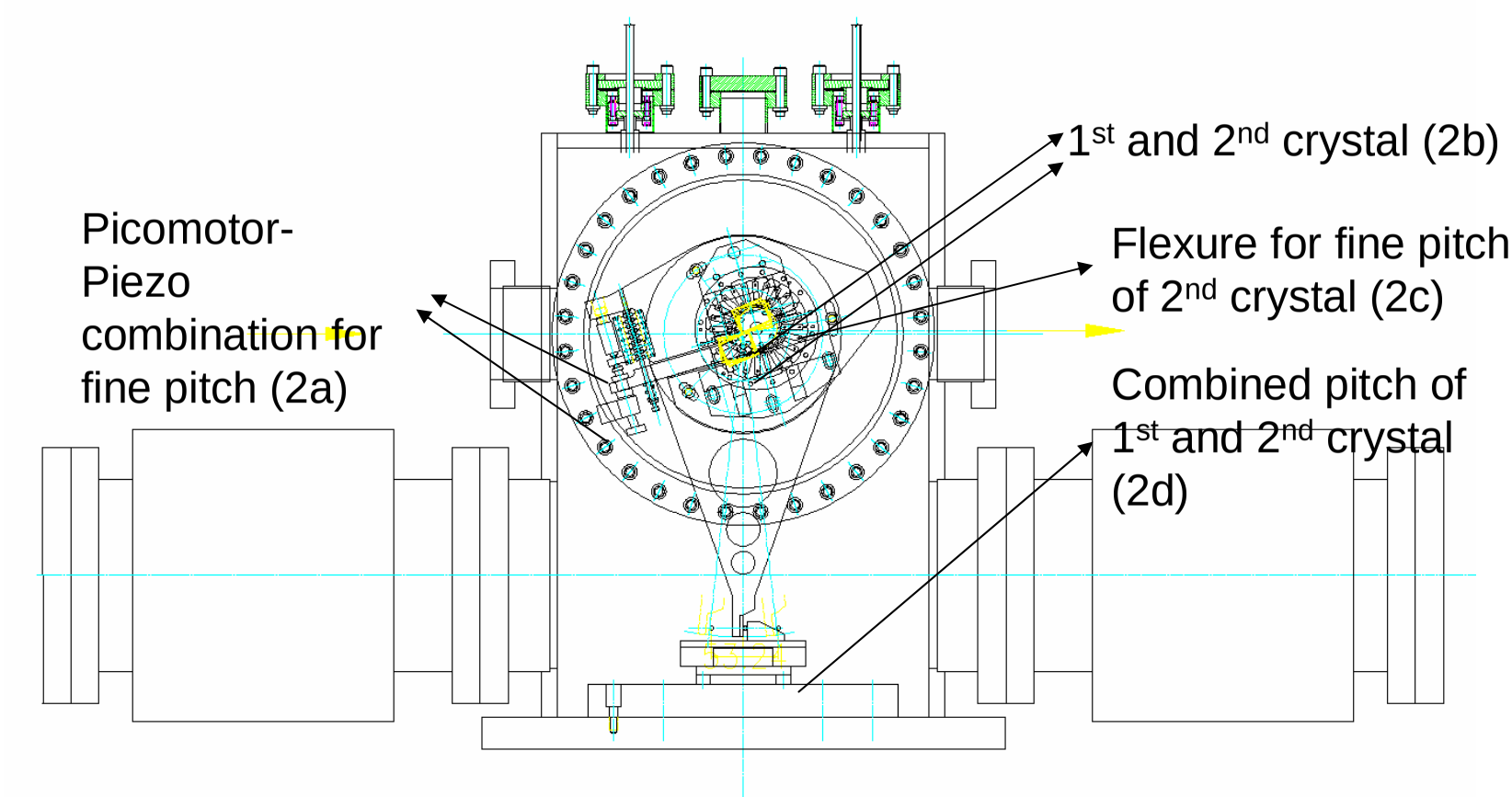


Figure 2: Internal assembly showing the weak-link structure.

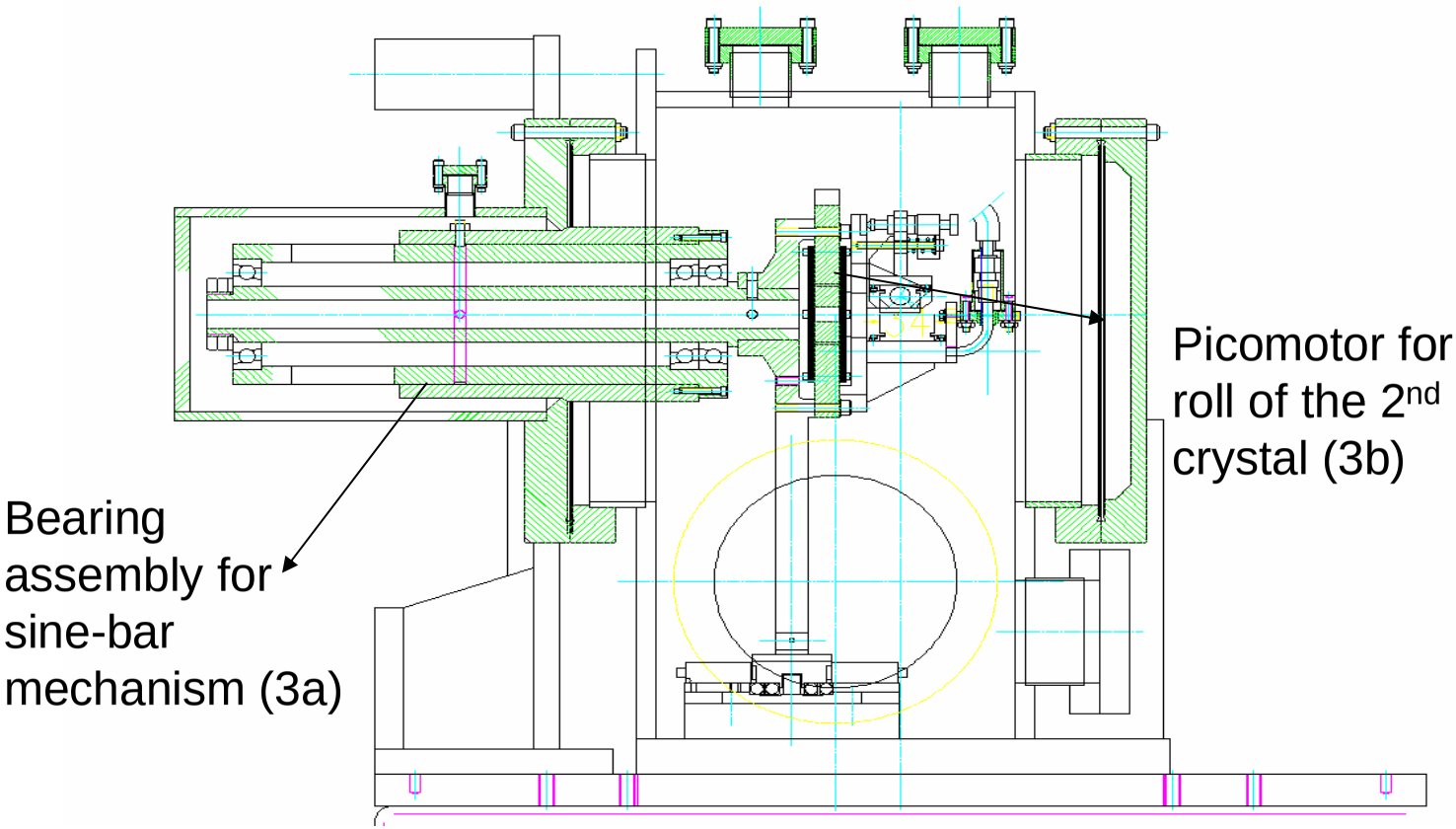


Figure 3: Sine-bar mechanism and roll mechanism of the monochromator.

**Table 1: Project Status/Timeline**

| *S.No.* | *Task* | *Tentative time* |
|---|---|---|
| 1 | Optical ray tracing of pseudo channel-cut monochromator | Complete |
| 2 | Delivery of linear stage for the sine-bar mechanism from Nanomotion Inc. | Complete |
| 3 | Expected delivery of bearing assembly for the sine-bar mechanism (6 months lead time) | February 2005 |
| 4 | Testing of the control system for the linear stage from Nanomotion Inc. | In progress |
| 5 | Delivery of Ion pumps | Complete |
| 6 | Design of the optical table and blue prints for bid | Quote received in January 2005 (5 months lead time) |
| 7 | Completion of design of mechanical assembly and vacuum tank and blue prints for bid | February 2005 |
| 8 | Expected fabrication of mechanical assembly and vacuum tank | May 2005 |
| 9 | Procurement of picomotor and piezo actuators | April 2005 |
| 10 | Control system integration to EPICS | Feb. 2005 – Mar. 2005 |
| 11 | Procurement of Ge crystals | February 2005 |
| 12 | Crystal fabrication and characterization | April 2005 |
| 13 | Expected delivery of the optical table | June 2005 |
| 14 | Offline assembly and testing | July 2005 – August 2005 |
| 15 | Commissioning in the beamline | September 2005 |
| 16 | Coherence characterization of the new monochromator | October 2005 |

## 4. Summary

The mechanical design for a pseudo-channel cut monochromator is at an advanced stage. Some of the long lead time items have been procured and testing of some of the components that will be used for the first time at the APS is underway. The monochromator promises a significant improvement in preserving the beam brilliance which will make a strong impact on x-ray photon correlation spectroscopy experiments carried out at 8-ID-I.