USER'S MANUAL

STEP/PAK®

MODULAR MOTION CONTROL SYSTEM

REVISION 2.1

ACS ADVANCED CONTROL SYSTEMS CORPORATION

35 Corporate Park Drive, Pembroke, Massachusetts 02359
PHONE: 781-829-9228 FAX: 781-829-9875
EMAIL: techsupport@acsmotion.com

www.ACSMotion.com

TABLE OF CONTENTS

1. GENERAL INFORMATION 6

1.1. Warranty 6

1.2. Assistance and Maintenance Agreements 6

1.3. Documentation Discrepancies 7

1.4. Service Procedure 7

2. SP SYSTEM OVERVIEW 8

2.1. Modular Motion Control System Concept 8

2.2. Step-Pak System Components 8

3. SPR-9 EQUIPMENT RACK 10

3.1. Description 10

3.2. Specification - Equipment Rack 10

3.3. Power Connections 11

3.4. Motor and Limits Connections 11

3.5. Interface/Indexer Module Connector 14

3.6. Motor Driver Module Connectors 15

3.7. Encoder Connectors 17

4. SPD-6U STEPPING MOTOR DRIVER MODULE 18

4.1. Description 18

4.2. Specifications 18

4.3. Front Panel Description 19

4.4. SPD-6U Motor Connections 19

4.5. Internal Adjustments 21

4.6. Motor Current Adjustment Procedure 21

4.7. SPD-6U Edge Connector Assignments 22

5. SPD-6B STEPPING MOTOR DRIVER MODULE 24

5.1. Description 24

5.2. Specifications 24

5.3. Front Panel Description 24

5.4. SPD-6B Motor Connections 25

5.5. Internal Adjustments 28

5.6. Motor Current Adjustment Procedure 28

6. SPD-32M STEPPING MOTOR DRIVER MODULE 29

6.1. Description 29

6.2. Specifications 29

6.3. Front Panel Description 30

6.4. SPD-32M Idle Current Adjustment 32

6.5. SPD-32M Motor Connections 32

7. SPD-35 STEPPING MOTOR DRIVER MODULE 34

7.1. Description 34

7.2. Specifications 34

7.3. Front Panel Description 35

7.4. SPD-35 Idle Current Adjusment 36

7.5. SPD-35 Motor Connections 37

8. SPD-5F STEPPING MOTOR DRIVER MODULE 39

8.1. Description 39

8.2. Specifications 39

8.3. Front Panel Description 40

8.4. SPD-5F Motor Connections 41

8.5. Internal Adjustments 43

8.6. Motor Current Adjustment Procedure 44

8.7. SPD-5F Edge Connector Assignments 45

9. SPI-8 INDEXER MODULE 46

9.1. Description 46

9.2. SPI-8 Specification 46

9.3. SPI-8 Front Panel Controls and Connections 48

9.4. SPI-8 Edge Connector Assignments 50

9.5. Instruction Message Processing Principles 51

9.6. Instruction Structure 52

9.7. Response Messages 52

9.8. Instruction Groups 53

9.9. Instruction Set - Index 54

9.10. Instruction Set - Alphabetical Order 55

10. SPC-1 INTERFACE MODULE 65

10.1. Description 65

10.2. SPC-1 Front Panel Connector 65

10.3. Internal Jumper Options 65

10.4. SPC-1 Input/Output Connector; Pin Assignments 66

10.5. SPC-1 PC Board Connector Pin Assignments 68

11. SPC-2 INTERFACE MODULE 69

11.1. Description 69

11.2. SPC-2 Front Panel Connectors 69

11.3. SPC-2 PC Board Connector Pin Assignments 71

12. SPC-3 INTERFACE MODULE 72

12.1. D9.1 Description 72

12.2. Front Panel Connections 73

12.3. PC Board Connector Pin Assignments 74

13. SPC-4 INTERFACE MODULE 75

13.0 Description 75

13.1. SPC-4 Front Panel Connections 76

13.2. PC Board Connector Pin Assignments 77

14. SPT-8, SPT-8R POWER TRANSFORMER 78

14.1. Description 78

14.2. SPT-8 Specifications 78

14.3. SPT-8R Description 79

14.4. SPT-8R Specifications 79

15. SPR-9K MOTOR CONNECTOR KIT 79

16. SPD-3M STEPPING MOTOR DRIVER (DISCONTINUED!!!) 80

16.1. Description 80

16.2. Specifications 80

16.3. Front Panel Description 81

16.4. SPD-3M Idle Current Adjustment 83

16.5. SPD-3M Edge Connector Assignments 86

17. MANUAL REVISION HISTORY 87

1. General Information

1.1. Warranty

ACS warrants its products to operate within specifications under normal use and services for a period of one year from the date of shipment. Component products, spares, replacement parts and repairs are warranted for 90 days. Software is thoroughly tested and thought to be functional, but is supplied "as is" with no warranty of any kind covering detailed performance. Accessory products not manufactured by ACS are covered by the original equipment manufacturers warranty only.

In exercising this warranty, ACS will repair or, at its option, replace, any product returned to the customer service department or an authorized service facility within the warranty period, provided that the warrantor's examination discloses that the product is defective due to workmanship or materials and has not been caused by misuse, neglect, accident, or abnormal conditions or operations.

The purchaser is responsible for the transportation and insurance charges arising from the return of products to the servicing facility. ACS will return all in-warranty products with transportation prepaid.

This warranty is in lieu of all other warranties, expressed or implied, including but not limited to any implied warranty of merchantability, fitness, or adequacy for any particular purpose or use. ACS shall not be liable for any special, incidental, or consequential damages, whether in contract, or otherwise.

1.2. Assistance and Maintenance Agreements

Answers to questions concerning installation, calibration, and use of ACS equipment are available from the customer service department, 35 Corporate Park Drive, Pembroke, MA 02359, phone 781-829-9228.

ACS offers a selection of customer support services.

For example, maintenance agreements provide extended warranty and allow the customer to budget maintenance costs after the initial one year warranty has expired. Other services requested by the customer, such as installation, training, on-site repair, and addition of engineering improvements, are made available through specific Supplemental Support Agreements.

1.3. Documentation Discrepancies

ACS is committed to providing state-of-the-art products and is continually refining and improving the performance of its products. While physical modifications can be implemented quite rapidly, the corrected documentation frequently requires more time to produce. Consequently, this manual may not agree in every detail with the accompanying product. There may be small discrepancies in the values of components and, occasionally, minor logic changes. Where any such inconsistencies exist, please be assured that the unit is correct and incorporates the most up-to-date circuitry.

1.4. Service Procedure

Products requiring maintenance should be returned to the customer service department or authorized service facility. If under warranty, ACS will repair and replace the part at no charge. The purchaser is only responsible for the transportation charges arising from the return of the goods to the service facility.

For all ACS products in need of repair after the warranty period, the customer must provide a Purchase Order Number before any inoperative equipment can be repaired or replaced. The customer will be billed for the parts and labor for the repair as well as for shipping.

2. SP System Overview

2.1. Modular Motion Control System Concept

Step-Pak systems are well suited for motion control applications where many motors are being controlled, motors of various types and sizes, and where the installation space is limited.

The modular approach, where all modules are interchangeable, powered from the same power source, is extremely flexible. Special attention is given to the design of the motor drive modules with respect to reliability, heat generation, and electrical noise generation.
Each module derives all the required power supplies from a single 48VAC power source.

2.2. Step-Pak System Components

The Step-Pak system consists of a nine slot enclosure, which can be mounted into a standard 19" rack. Eight slots are used for motor drive modules, the ninth slot for the control module. The Step-Pak system is powered from an external isolation transformer with 48VAC. This reduces electrical shock hazards and provides a less noisy environment.

The following Step-Pak system components are available now:

SPR-9 Nine slot rack for up to eight driver modules and one interface or indexer module.

SPR-9K Motor Connector Kit.

SPD-6U Stepping Motor Driver Module, unipolar, bilevel type, for five, six, or eight lead stepping motors.

SPD-6B Stepping Motor Driver Module, bipolar, bilevel type, for four, five, six, or eight lead stepping motors.

SPD-5F Stepping Motor Driver Module, unipolar, bilevel for five, four or three phase motors.

SPD-3M Stepping motor driver module, bipolar chopper type, for four, six or eight lead stepping motors with microstepping.

SPI-8 Eight channel indexer with RS-232 and RS-485 communication control ports.

SPC-1 Interface/connect module, compatible with VME58-8S indexer.

SPC-2 Interface/connect module, compatible to ACS model MDU-8B eight channel driver package, used in older installations.

SPC-3 Interface/Connect Module with differential receivers for step and direction and encoders and limits outputs. Suggested for use with long (<25') interconnect cable.

SPC-4 Interface/Connect Module providing eight RJ-45 Front Panel connectors of an external indexer or controller for control of up to eight stepping motors.

SPT-8 Isolation transformer, 48VAC at 25AMP RMS.

SPT-8R Isolation transformer with enclosure, power cable, circuit breaker, to be installed in 19" rack.

3. SPR-9 Equipment Rack

3.1. Description

The equipment rack provides housing and internal connections for plugged-in Step-Pak modules as well as connectors for connecting the external equipment. Modules are plugged from front, each with its own front panel, into back panel mating connectors.

There are eight slots to accommodate up to eight drive modules, which plug into eighty pin printed circuit board type edge connectors.

The ninth slot, assigned to interface/control type module, has a 128 pin DIN type PCB connector.

Viewed from the back, the SPR-9 unit has eight motor connectors, eight encoder connectors, two low DC voltage connectors, and two power distribution bars with heavy duty terminals.

The back plane is protected with a clear acrylic cover. and “U” shaped round still bar, which is also used to support heavy motor cables.

3.2. Specification - Equipment Rack

Part Number:	SPR-9
Physical Size:	19” wide, 7” high, 17” deep
Power Connection:	48VAC heavy duty terminals, screw type
Motor Connection:	Eight connectors, ELCO type, 8016 series. 20 pin
Mating Motor Connector:	ELCO, P.N. 00-8016-020-000-603 or equivalent
Insert Pin:	ELCO P.N. 60-8017-03-13-00-339 or equivalent
Encoder Connectors:	Eight female connectors DB-9, 9 pin
Limits Power Connector:	Phoenix type, 2 pin, male
Mating Limits Power Plug:	Phoenix #1757019 or equivalent
Encoder Power Connector:	Phoenix type, 2 pin, male
Mating Encoder Power Plug:	Phoenix #1757019 or equivalent
Shipping Weight (Rack Only):	13 lbs.
Shipping Weight (Fully Equipped):	45 lbs.

<u>SPR-9K KIT:</u>

EDAC Connector Block	516-020-000-101
EDAC Hook	516-230-520
EDAC Crimp Pin	516-290-590

3.3. Power Connections

There are three external power connections to the SPR-9 equipment rack. All plugged-in modules are supplied with 48VAC and all the required DC voltages for a particular module are derived on the module itself. Two heavy duty power bars distribute power to individual modules. Two large compression screw type terminals are provided on the back of the SPR-9 rack. One side of the 48VAC is connected to pins, A1, A2, A3, A4, A5, B1, B2, B3, B4, B5. The 48VAC return is connected to A6, A7, A8, A9, A10, B6, B7, B8, B9, B10 off all module back plane connectors.

Connector J9 when connected to the external power supply provides power to the external limits and home circuitry. J9+V is wired to all eight motor connectors Pin V. J9GND is wired to pins R on all motor connectors (J11 - J18).

Connector J20 when connected to the external power supply provides the power required by external encoder circuitry. J20+V is wired to all eight encoder connectors (J21 - J28), pin 4. J20GND is wired to pin 9 on all encoder connectors.

J9 and J20 connectors provide convenient wiring for external equipment power requirements.

3.4. Motor and Limits Connections

Motors 1 to 8 are connected via motor connectors J11 to J18, respectively.

Step-Pak Motor Connector (ELCO 8016 connector on the Backplane [J11-J18])

Pin	Dir	Function	Pin	Dir	Function
A	Out	Motor Phase 1	E	Out	Motor Phase 1 return
B	Out	Motor Phase 2	F	Out	Motor Phase 2 return
C	Out	Motor Phase 3	H	Out	Motor Phase 3 return
D	Out	Motor Phase 4	J	Out	Motor Phase 4 return
K	Out	Motor Phase 5	L	Out	Motor Phase 5 return
W	In	Limit +	T	In	Limit + return (gnd)
X	In	Limit -	U	In	Limit - return (gnd)
N	In	M Home (Motor Home)	P	In	Home return (gnd)
V		+VL (Limits supply voltage)	R		VL return (gnd)
S		uncommitted	M		uncommitted

Note: Pins V and R are routed from J9 connector on the rear of the Step-Pak chassis. This power is separate from the power delivered to the encoder connector pins 4 and 5.
Note: For particular motor/driver combination wiring diagrams, refer to driver sections of this manual.

Stepping motor manufacturers use different color coding for motor cables. Some examples are in Table 3.1 for six lead motors and Table 3.2 for eight lead motors, and Table 3.3 for four lead motors.

MANUFACTURER	A	AB	B	C	CD	D
SUPERIOR ELECTRIC	GREEN	WHITE	GN/WH	RED	BLACK	RD/WH
ORIENTAL MOTOR VEXTA	BLACK	YELLOW	GREEN	RED	WHITE	BLUE
EASTERN AIR DEVICES	GREEN	WHITE	GN/WH	RED	BLACK	RD/WH
PACIFIC SCIENTIFIC	BLACK	ORANGE	B/OR/WH	RED	YELLOW	RD/YL/WH

TABLE 3.1 SIX LEAD MOTOR COLOR CODE

MANUFACTURER	A	A	B	B	C	C	D	D
ORIENTAL/VEXTA	BLACK	BK/WH	OR/WH	ORANGE	RED	RD/WH	YL/WH	YELLOW
PACIFIC SCIENTIFIC	BLACK	BK/WH	OR/WH	ORANGE	RED	RD/WH	YL/WH	YELLOW
SUPERIOR ELECTRIC	RED	BLACK	WHITE	WHT/RED	GREEN	ORANGE	WH/BK	WH/GN

TABLE 3.2 EIGHT LEAD MOTOR COLOR CODE

MANUFACTURER	A	A	B	B	
SUPERIOR ELECTRIC	RED	WH/RD	W/BK	BLACK	
PACIFIC SCIENTIFIC	RED	YELLOW	ORANGE	BLACK	

TABLE 3.3 FOUR LEAD MOTOR COLOR CODE

FIGURE 3.4 SWITCH TYPE LIMITS CONNECTION

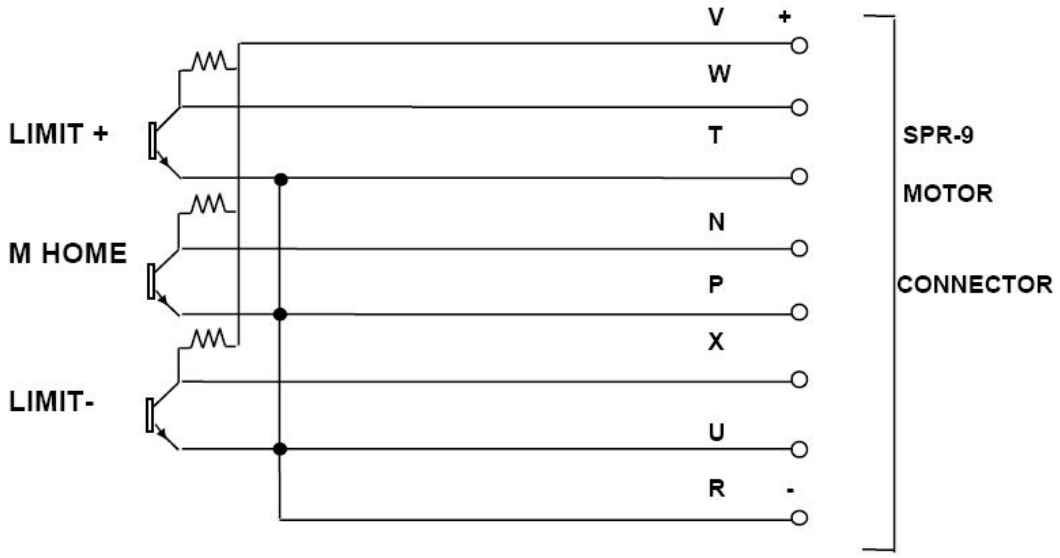

FIGURE 3.5 SOLID STATE TYPE LIMITS CONNECTION

3.5. Interface/Indexer Module Connector

Interface or indexer modules plug into J0 128 pin DIN type PCB connector.

DIN 128 MOTHER BOARD CONNECTOR
PIN ASSIGNMENTS

J0		J0		J0		J0	
1A	48VAC	1B	48 VAC	1C	48 VAC	1D	48 VAC
2A	Index 8 -	2B	Index 8 +	2C	M Home 8	2D	Lim 8 -
3A	PHA 8 -	3B	PHA 8 +	3C	Lim 8 +	3D	M Home 7
4A	PHB 8 -	4B	PHB 8+	4C	Lim 7 -	4D	Lim 7 +
5A	NC	5B	E Home 8	5C	M Home 6	5D	Lim 6 -
6A	Index 7 -	6B	Index 7 +	6C	Lim 6 +	6D	M Home 5
7A	PHA 7 -	7B	PHA 7 +	7C	Lim 5 -	7D	Lim 5 +
8A	PHB 7 -	8B	PHB 7 +	8C	M Home 4	8D	Lim 4 -
9A	NC	9B	E Home 7	9C	Lim 4 +	9D	M Home 3
10A	Index 6 -	10B	Index 6 +	10C	Lim 3 -	10D	Lim 3 +
11A	PHA 6 -	11B	PHA 6 +	11C	M Home 2	11D	Lim 2 -
12A	PHB 6 -	12B	PHB 6 +	12C	NC	12D	Lim 2 +
13A	Index 5 -	13B	E Home 6	13C	NC	13D	NC
14A	NC	14B	Index 5 +	14C	NC	14D	NC
15A	NC	15B	PHA 5 +	15C	NC	15D	M Home 1
16A	PHA 5 -	16B	PHB 5 +	16C	NC	16D	Lim 1 -
17A	PHB 5 -	17B	E Home 5	17C	NC	17D	Lim 1 +
18A	E Home 4	18B	PHB 4 -	18C	NC	18D	Dir 1
19A	PHB 4 +	19B	PHA 4 -	19C	NC	19D	Step 1
20A	PHA 4 +	20B	Index 4 -	20C	NC	20D	Status 1
21A	Index 4 +	21B	E Home 3	21C	NC	21D	Dir 2
22A	PHB 3 -	22B	PHB 3 +	22C	Status 2	22D	Step 2
23A	PHA 3 -	23B	PHA 3 +	23C	Step 3	23D	Dir 3
24A	Index 3 -	24B	Index 3 +	24C	Dir 4	24D	Status 3
25A	E Home 2	25B	PHB 2 -	25C	Status 4	25D	Step 4
26A	PHB 2 +	26B	PHA 2 -	26C	Step 5	26D	Dir 5
27A	PHA 2 +	27B	Index 2 -	27C	Dir 6	27D	Status 5
28A	Index 2 +	28B	E Home 1	28C	Status 6	28D	Step 6
29A	PHB 1 -	29B	PHB 1 +	29C	Step 7	29D	Dir 7
30A	PHA 1 -	30B	PHA 1 +	30C	Dir 8	30D	Status 7
31A	Index 1 -	31B	Index 1 +	31C	Status 8	31D	Step 8
32A	Gnd	32B	Gnd	32C	Gnd	32D	Gnd

3.6. Motor Driver Module Connectors

Motor Driver Modules plug into 80 pin PCB type edge connectors J1 to J8.

Back Panel Edge Connectors

Pin		**Motor Connector**
A1, B1	48 VAC	
A2, B2	“” “‘	
A3, B3	“” “”	
A4, B4	“” “”	
A5, B5	“” “”	
A6, B6	48 VAC Return	
A7, B7	“” “”	
A8, B8	“” “”	
A9, B9	“” “”	
A10, B10	“” “”	
A11, B11	Motor Phase 1	A
A12, B12	“” “”	A
A13, B13	Motor Phase 1Return	E
A14, B14	“” “”	E
A15, B15	Motor Phase 2 Return	F
A16, B16	“” “”	F
A17, B17	Motor Phase 2	B
A18, B18	“” “”	B
A19, B19	Motor Phase 5	L
A20, B20	“” “”	L
A21, B21	Motor Phase 3	C
A22. B22	“” “”	C
A23, B23	Motor Phase 3 Return	H
A24, B24	“” “”	H
A25, B25	Motor Phase 4 Return	J
A26, B26	“ “”	J
A27, B27	Motor Phase 4	D
A28, B28	“” “”	D
A29, B29	Motor Phase 5Return	K
A30, B30	“” “”	K
A31, B31	Motor Power Comm.	-
A32, B32	Home - M	N
A33, B33	Limit -	X
A34, B34	Limit +	W
A35, B35	Spare	
A36, B36	Spare	
A37, B37	Direction	
A38, B38	Step	
A39, B39	Status	
A40, B40	Logic Gnd	T,U,P,R

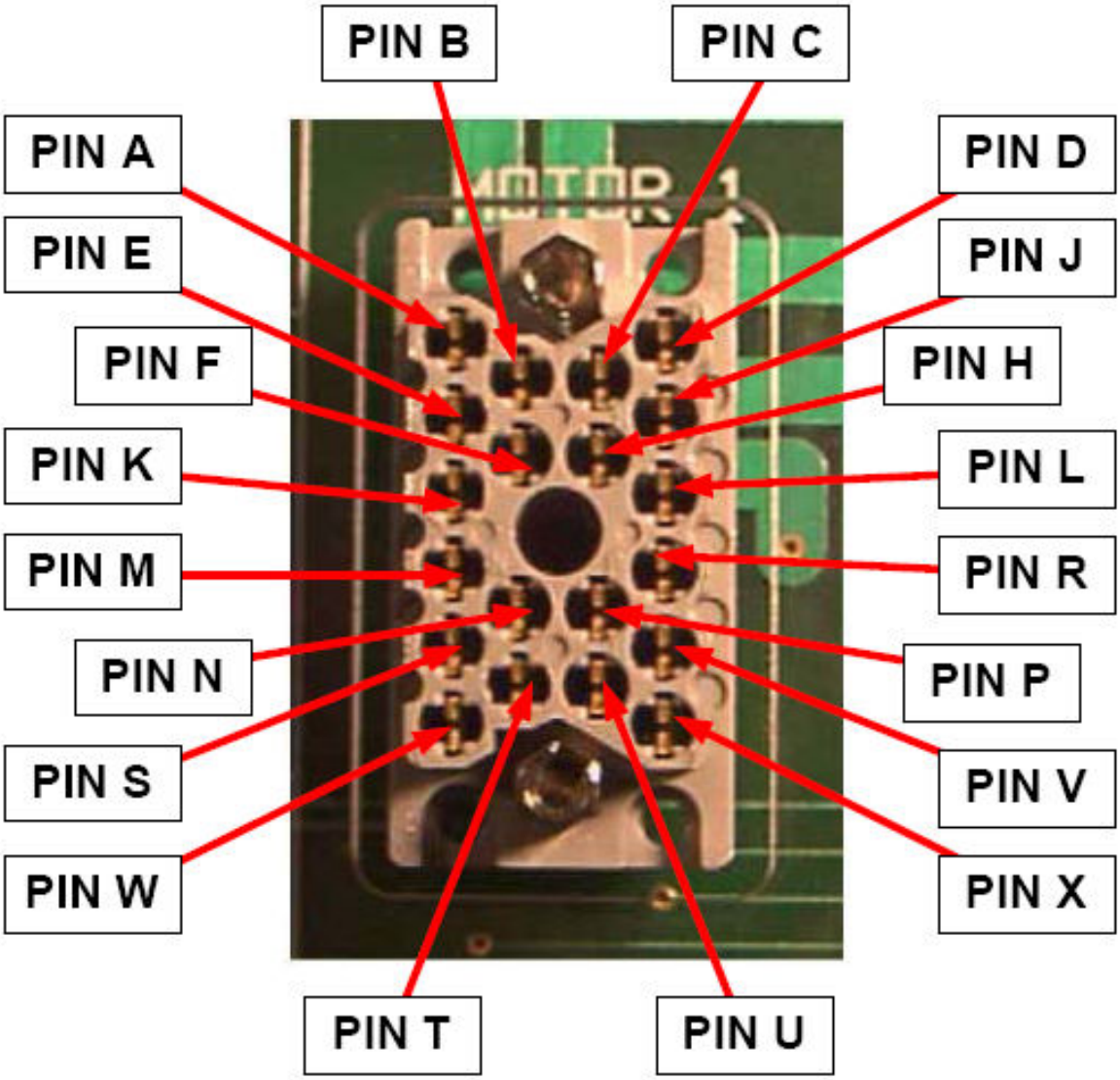

FIG 3.6 MOTOR CONNECTOR PIN ASSIGNMENTS

3.7. Encoder Connectors

Encoders 1 to 8 are connected to the system via encoder connectors J21 to J28. Connectors are located on the right side of the SPR-9 unit - viewed from the back, connectors are nine pin, D type, female.

Pin	Dir	Function	Pin	Dir	Function
1	IN	Index +	6	IN	Index -
2	IN	PHA +	7	IN	PHA -
3	IN	PHB +	8	IN	PHB -
4		+V	9		V+ Return (GND)
5	IN	E Home			

Pins 4 and 9 of all encoder connectors are connected to encoder power connector J20. This power is separate from the power delivered to the motor connectors.

4. SPD-6U Stepping Motor Driver Module

4.1. Description

The SPD-6U is a high efficiency and high performance stepping motor driver. The proprietary unipolar bilevel design provides absolutely minimum motor and driver losses which result in cool running motors and drivers. This enables high density packaging of the equipment.

Low DC voltage is applied to the motor windings when the motor is positioned. High voltage is applied synchronously with motor steps for fast acceleration and high running torque. Most of the switching losses which are inherent in chopper type drives are eliminated resulting in cooler motors.

Another benefit of the bilevel type motor drive is reduction of radiated electrical noise, which is quite critical for many scientific types of data acquisition installations. When the motor is held at position, no currents are interrupted, therefore, there are no radiated electromagnetic fields, which can interfere with measurements.

4.2. Specifications

Part Number:	SPD-6U
Physical Size:	Module, 1.7” wide, 7.0” high, 13.0” deep
Module Connections:	All connections are via 80 pin PCB type edge connectors.
Power Connection:	48VAC
Motor Connection:	Five, six, or eight lead stepping motors.
Limits Input:	Two inputs, used for front panel limits status display.
Home Input:	One input, used for front panel home status display.
Idle Current Setting:	Internal low voltage jumper setting, depends on motor used and holding torque required.
Nominal Low Voltages:	Four, six, eight, ten volts.
Running Current Setting:	Front panel selectable; 0.5, 1, 2, 3, 4, 5, 6, Amps/winding.
Status Output:	TTL, Hi when normal.

Note: When plugging or unplugging the SPD-6U modules under power, make sure that the front panel motor ON/OFF switch is in the OFF position. The same is important when connecting or changing the motors. It is recommended to power down the equipment rack when changing motors or modules.

4.3. Front Panel Description

FIGURE 4.1 SPD-6U FRONT PANEL LAY OUT

The rectangular white area on top of the front panel can be used to identify the usage of the particular module.

“Motor Off” LED is on whenever the motor is switched off by motor On/Off switch. “Status” output also goes low, signaling external indexer or host computer the motor off status.

“Limit +”, “Home”, “Limit -” LEDs are on whenever the corresponding input is open. These inputs do not stop the motor by itself.

“Motor Busy” LED is on whenever the motor is stepping.

Full Step/Half Step slide switch controls Full/Half step mode of operation.

Motor On/Off slide switch turns on or off motor winding current.

Motor Current Selector switch is used to set the motor winding current when stepping. A small screwdriver is needed to change the setting. Peak current selection are 0.5, 1, 2, 3, 4, 5, 6 Amp/Phase. RMS current value changes with the motor loading. Position 7 sets 7 Amp/Phase. It can be used when motor duty cycle is low (low motor stepping/idle ratio). Positions 8 and 9 are the same as positions 0 and 1 respectively.

4.4. SPD-6U Motor Connections

Motors are connected to the driver via 20 pin connectors J1 to J8 on the backplane of the SPR-9 equipment rack. The SPD-6U Driver is designed to drive five, six, or eight lead stepping motors. For motor leads color codes see Section 3.4.

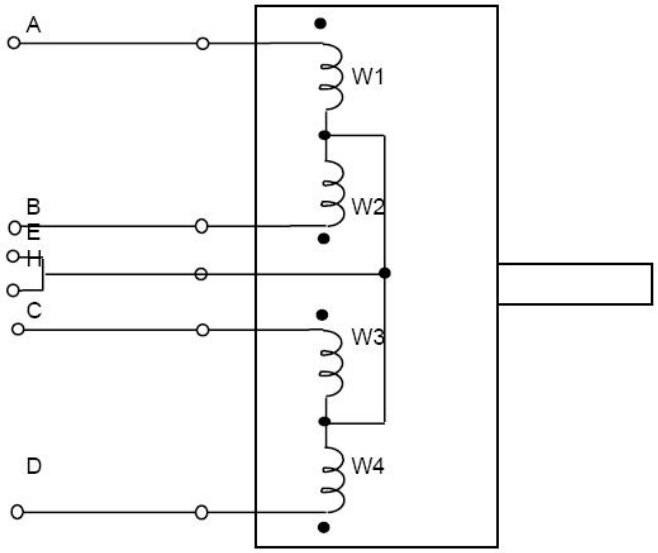

FIGURE 4.1 FOUR PHASE -FIVE LEAD STEPPING MOTOR CONNECTION TO SPD-6U TYPE DRIVER

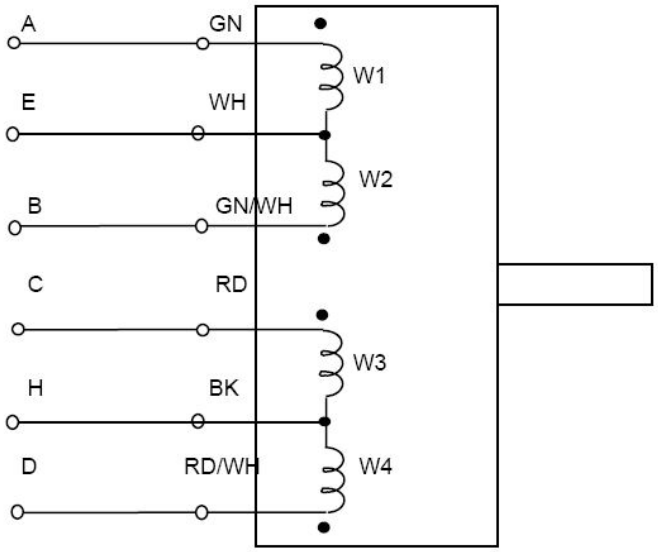

FIGURE 4.2 FOUR PHASE - SIX LEAD STEPPING MOTOR CONNECTION TO SPD-6U TYPE DRIVER MODULE.

Color code is for Slo-Syn motors. Swap windings to W3 and W4 for motor rotation reversal

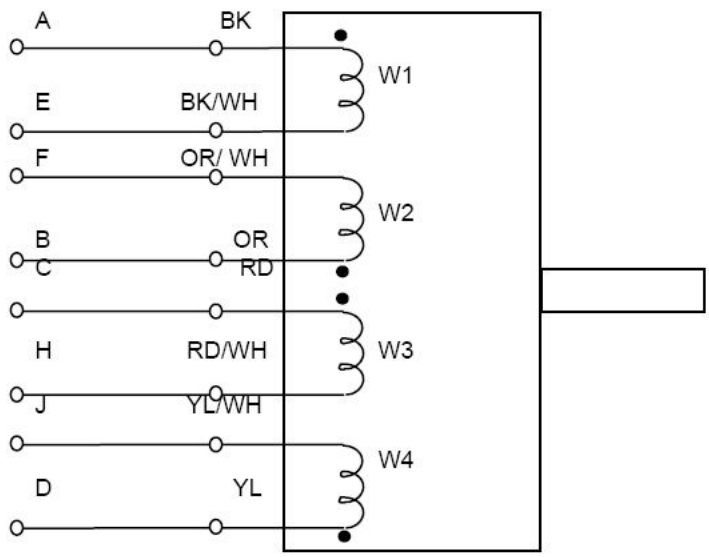

FIG. 4.3 FOUR PHASE - EIGHT LEAD STEPPING MOTOR CONNECTION TO SPD-6U DRIVER MODULE.

Color Code is for Slo-Syn Motors. Swap windings W3 and W4 for motor rotation reversal.

4.5. Internal Adjustments

The output of the low voltage power supply is adjusted internally, which sets motor idle current. Four quick disconnect PCB type lugs, marked with 4, 6, 8, 10 are selection points. Four giving nominal four volts output, ten for ten volts output. To increase the motor current move quick disconnect lug to higher voltage value.

Small motors with less current requirement can also be used with SPD-6U driver module. Current is reduced by inserting current limiting resistors in the motor windings, locations R1 and R2 on the PC Board. Wire jumpers are factory installed at these two locations.

Trim pot R16 is factory preset and is not to be readjusted. It controls peak motor currents.

4.6. Motor Current Adjustment Procedure

Motor Current Adjustment is important for smooth motor operation. It greatly depends on the type and size of the motor, friction, inertia, and mechanical resonances of the load, and duty cycle of operation. At all times the motor temperature must be within

specified temperature limits. When adjusting the motor current and testing the operation, the mechanical load is to be coupled to the motor.

Start with factory settings i.e. 4 volts for low voltage, and 0.5 Amp front panel setting for motor current. Increase motor current setting until motor starts operating reliably. Increase low voltage, if needed. Operate motor as it will operate in your application and check the motor temperature.

4.7. SPD-6U Edge Connector Assignments

SPD-6U Edge Connectors

Pin		**Pin**	
A1	48 VAC	B1	48 VAC
A2	“” “”	B2	“” “”
A3	“” “”	B3	“” “”
A4	“” “”	B4	“” “”
A5	“” “”	B5	“” “”
A6	48 VAC Return	B6	48 VAC Return
A7	“” “”	B7	“” “”
A8	“” “”	B8	“” “”
A9	“” “”	B9	“” “”
A10	“” “”	B10	“” “”
A11	Motor Phase 1	B11	Motor Phase 1
A12	“” “”	B12	“” “”
A13	Motor Phase 1 Return	B13	Motor Phase 1 Return
A14	“” “”	B14	“” “”
A15	Motor Phase 2 Return	B15	Motor Phase 2 Return
A16	“” “”	B16	“” “”
A17	Motor Phase 2	B17	Motor Phase 2
A18	“” “”	B18	“” “”
A19	NC	B19	NC
A20	“” “”	B20	“” “”
A21	Motor Phase 3	B21	Motor Phase 3
A22	“” “”	B22	“” “”
A23	Motor Phase 3 Return	B23	Motor Phase 3 Return
A24	“” “”	B24	“” “”
A25	Motor Phase 4 Return	B25	Motor Phase 4 Return
A26	“” “”	B26	“” “”
A27	Motor Phase 4	B27	Motor Phase 4
A28	“” “”	B28	“” “”
A29	NC	B29	NC
A30	“” “”	B30	“” “”
A31	Motor Power Comm.	B31	Motor Power Comm.
A32	Home - M	B32	Home - M
A33	Limit -	B33	Limit -

A34	Limit +	B34	Limit +
A35	NC	B35	NC
A36	NC	B36	NC
A37	Direction	B37	Direction
A38	Step	B38	Step
A39	Status	B39	Status
A40	Logic Gnd	B40	Logic Gnd

5. SPD-6B Stepping Motor Driver Module

5.1. Description

The SPD-6B is a high efficiency and high performance stepping motor driver. The proprietary bipolar bilevel design provides absolutely minimum motor and driver losses which result in cool running motors and drivers. This enables high density packaging of the equipment.

Low DC voltage is applied to the motor windings when the motor is positioned. High voltage is applied synchronously with motor steps for fast acceleration and high running torque. Most of the switching losses which are inherent in chopper type drives are eliminated resulting in cooler motors.

Another benefit of the bilevel type motor drive is reduction of radiated electrical noise, which is quite critical for many scientific types of data acquisition installations. When the motor is held at position, no currents are interrupted, therefore, there are no radiated electromagnetic fields, which can interfere with measurements.

5.2. Specifications

Part Number:	SPD-6B
Physical Size:	Module, 1.7” wide, 7.0” high, 13.0” deep
Module Connections:	All connections are via 80 pin PCB type edge connectors.
Power Connection:	48VAC
Motor Connection:	Four, six, or eight lead stepping motors.
Limits Input:	Two inputs, used for front panel limits status display.
Home Input:	One input, used for front panel home status display.
Idle Current Setting:	Internal low voltage jumper setting, depends on motor used and holding torque required.
Nominal Low Voltages:	Four, six, eight, ten volts.
Running Current Setting:	Front panel selectable; 0.5, 1, 2, 3, 4, 5, 6, Amp/winding.
Status Output:	TTL, Hi when normal.

Note: Do not plug or unplug SPD-6B modules under power. Make sure that the front panel motor ON/OFF switch is in the OFF position. The same is important when connecting or changing the motors. It is recommended to power down the equipment rack when changing motors or modules.

5.3. Front Panel Description

Figure 5.1 SPD-6B Front Panel Lay Out

The rectangular white area on top of the front panel can be used to identify the usage of the particular module. It can be marked with pencil or marker.

"Motor Off" LED is on whenever the motor is switched off by motor On/Off switch. "Status" output also goes low, signaling external indexer or host computer the motor off status.

"Limit +", "Home", "Limit -" LEDs are on whenever the corresponding input is open. These inputs do not stop the motor by itself.

"Motor Busy" LED is on whenever the motor is stepping.

Full Step/Half Step slide switch controls Full/Half step mode of operation. To change the mode, motor winding current must be OFF.

Motor On/Off slide switch turns on or off motor winding current.

Motor Current Selector switch is used to set the motor winding current when stepping. A small screwdriver is needed to change the setting. Peak current selection are 0.5, 1, 2, 3, 4, 5, 6 Amp/Phase. RMS current value changes with the motor loading. Position 7 sets 7 Amp/Phase. It can be used when motor duty cycle is low (low motor stepping/idle ratio). Positions 8 and 9 are the same as positions 0 and 1 respectively.

5.4. SPD-6B Motor Connections

Motors are connected to the driver via 20 pin connectors J1 to J8 on the backplane of the SPR-9 equipment rack. The SPD-6B Driver is designed to drive four, six, or eight lead stepping motors.

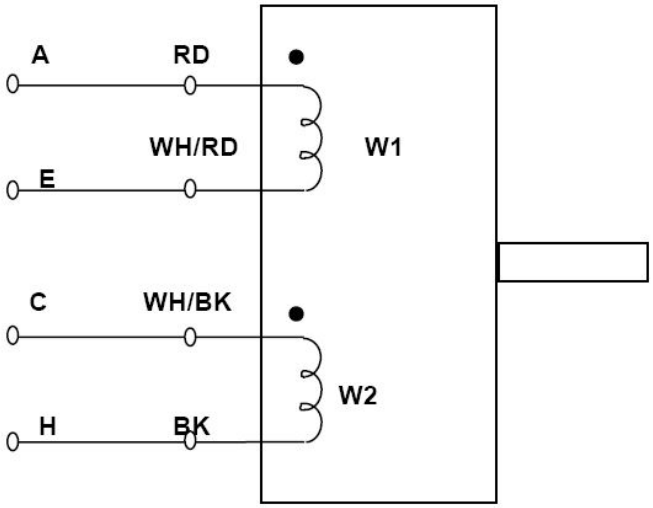

FIGURE 5.1 TWO PHASE-FOUR LEAD STEPPING MOTOR CONNECTION TO SPD-6B TYPE DRIVER

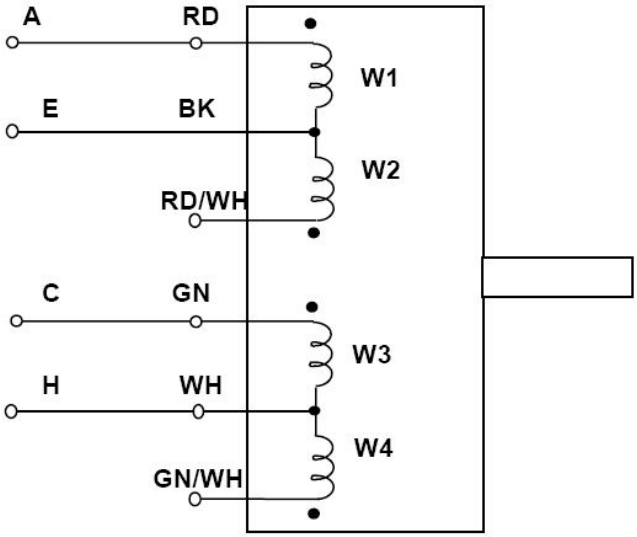

FIGURE 5.2 FOUR PHASE-SIX LEAD STEPPING MOTOR CONNECTION TO SPD-6B TYPE DRIVE MODULE.

Color code is for Slo-Syn Motors.
Swap windings to W3 and W4 for Motor Rotation Reversal

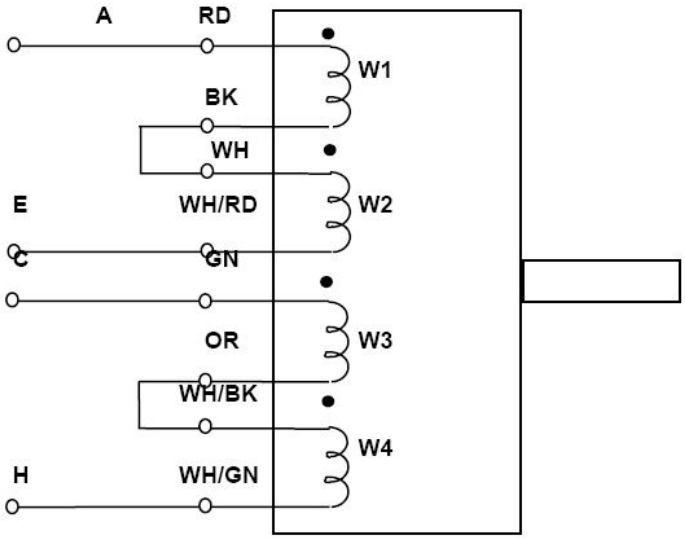

FIGURE 5.3 FOUR PHASE-EIGHT LEAD STEPPING MOTOR CONNECTION TO SPD-6B TYPE DRIVE MODULE, SERIES CONNECTION.

Color code is for Slo-Syn Motors.
Swap windings to W3 and W4 for Motor Rotation Reversal

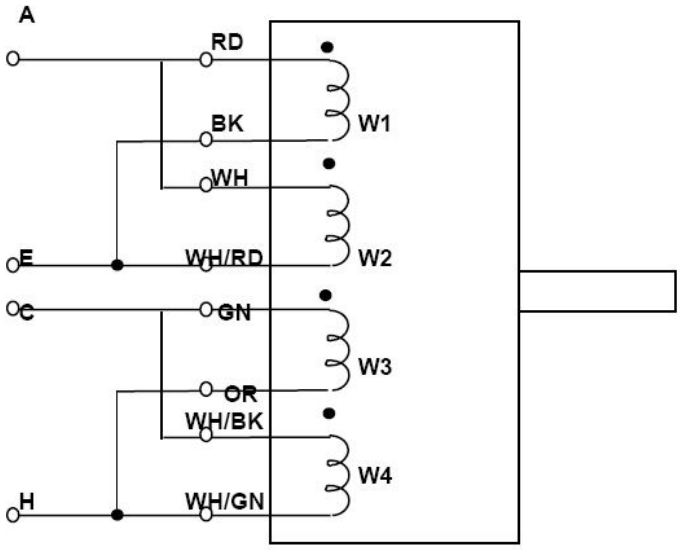

FIG. 5.4 FOUR PHASE - EIGHT LEAD STEPPING MOTOR CONNECTION TO SPD-6B DRIVER MODULE, PARALLEL CONNECTION.

Color code is for Slo-Syn Motors.

5.5. Internal Adjustments

The output of the low voltage power supply is adjusted internally, which sets motor idle current. Four quick disconnect PCB type lugs, marked with 4, 6, 8, 10 are selection points. Four giving nominal four volts output, ten for ten volts output. To increase the motor current move quick disconnect lug to higher voltage value.

Small motors with less current requirement can also be used with SPD-6B driver module. Current is reduced by inserting current limiting resistors in the motor windings, locations R46, R47, R48, R49 on the PC Board. Wire jumpers are factory installed at these two locations.

Trim pot P1 is factory preset and is not to be readjusted. It controls peak motor currents.

5.6. Motor Current Adjustment Procedure

Motor Current Adjustment is important for smooth motor operation. It greatly depends on the type and size of the motor, friction, inertia, and mechanical resonances of the load, and duty cycle of operation. At all times the motor temperature must be within specified temperature limits. When adjusting the motor current and testing the operation, the mechanical load is to be coupled to the motor.

Start with factory settings i.e. 4 volts for low voltage, and 0.5 Amp front panel setting for motor current. Increase motor current setting until motor starts operating reliably. Increase low voltage, if needed. Operate motor as it will operate in your application and check the motor temperature.

6. SPD-32M Stepping Motor Driver Module

6.1. Description

The SPD-32M is a bipolar chopper type of stepping motor driver with ministepping capability.

Motor winding currents are compared to preset values. When the motor current reaches the preset value, it is turned off and starts decaying to a preset low value when it is turned on again. The stepping motor driver is two phase bi-polar type, which is highly efficient, and result in cool operation of motors and drivers.

When the motor is held at position, some switching electrical noise is generated.

6.2. Specifications

Part Number:	SPD-32M
Physical Size:	Module, 1.7” wide, 7.0” high, 13.0” deep
Module Connection:	Via 80 pin PCB type edge connector
Power:	48 VAC
Motor Connection:	Four or eight lead stepping motors
Current Selector:	Front panel hex switch
Current Setting:	0.05, .1, .2, .3, .4, .5, .6, .7, .8, .9, 1, 1.5, 2, 2.5, 3, 3.5 Amps/phase
Ministep Selector:	Front panel BCD Switch
Ministep Resolution:	Full step, 2, 3, 4, 5, 6, 8, - ministeps per step
Automatic Current Reduction:	Internal jumper selection, 10%, 25%, 50%, 75%,
Motor Current OFF:	Front panel slide switch
Limits Input:	Two inputs, used for front panel limits status display
Home Input:	One input, used for front panel home status display
Status Output:	TTL, HI when normal

Note: When installing or removing driver modules, or changing motors, equipment rack must be powered down.

WARNING!!

DO NOT CONNECT OR DISCONNECT MOTOR LEADS WITH POWER APPLIED!!

DO NOT PLUG OR UNPLUG SPD-32M DRIVER WITH POWER APPLIED!

6.3. Front Panel Description

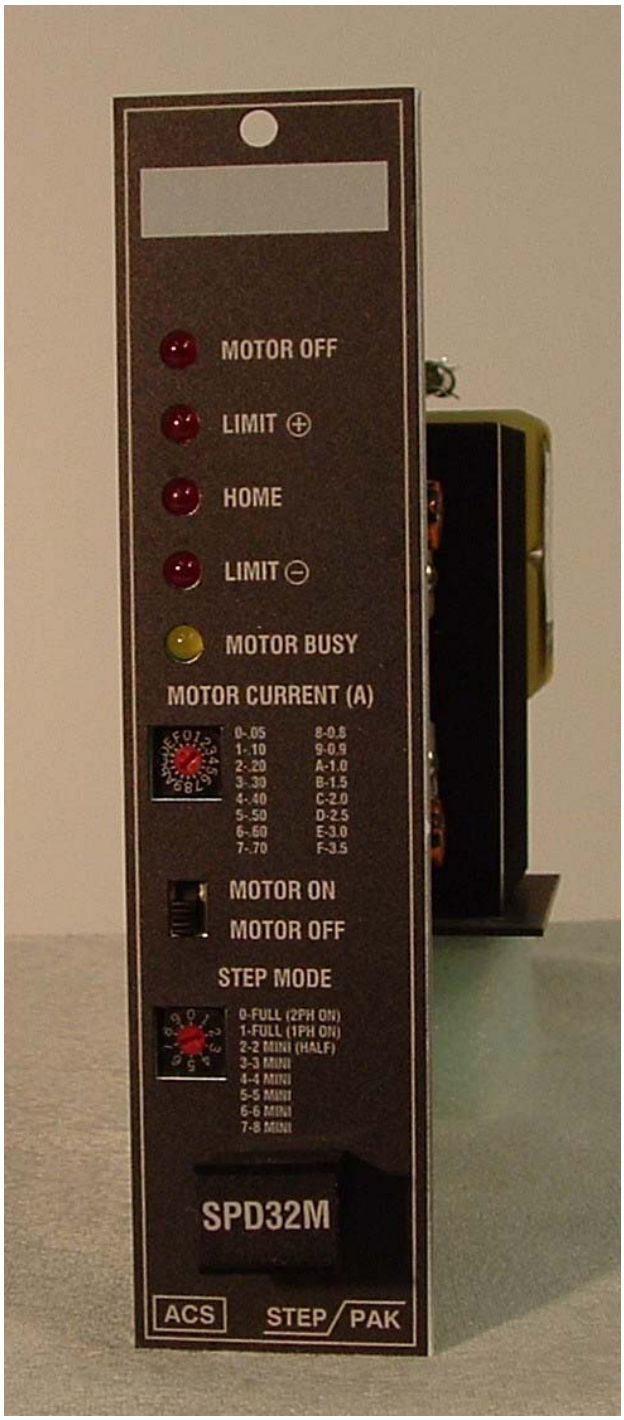

FIGURE 6.1 SPD-32M FRONT PANEL LAYOUT

The rectangular white area on top of the front panel can be used to identify the usage of the particular module. It can be marked with pencil or marker.

“Motor OFF” LED is on whenever the motor is switched off by motor On/Off switch. “Status” output also goes low, signaling external indexer of host computer the motor off status.

“Limit +”, “Home”, “Limit -” LEDs are off whenever the corresponding input is open. These inputs do not stop the motor by itself.

“Motor Busy” LED is on whenever the motor is stepping.

“Motor On/Off” slide switch turns on or off motor winding current.

“Ministep” selector switch is used to set microstep resolution. It is a 10 position rotary BCD switch.

WARNING!!
DO NOT CONNECT OR DISCONNECT MOTOR LEADS WITH POWER APPLIED!!

DO NOT PLUG OR UNPLUG SPD-32M DRIVER WITH POWER APPLIED!!

Switch Setting	Current
0	0.05
1	0.10
2	0.20
3	0.30
4	0.40
5	0.50
6	0.60
7	0.70
8	0.80
9	0.90
A	1.0
B	1.5
C	2.0
D	2.5
E	3.0
F	3.5 A

TABLE 6.1 MOTOR CURRENT SELECTION

Motor current selector switch is used to set peak motor winding current. It is a 16 position rotary Hex switch.

Switch Setting	Resolution (Ministeps per step)
0	Full (2 phase on)
1	Full (1 phase on)
2	2 (Half)
3	3
4	4
5	5
6	6
7	8
8	Not Used
9	Not Used

TABLE 6.2 MINISTEP RESOLUTION SELECTION

WARNING!!

DO NOT CONNECT OR DISCONNECT MOTOR LEADS WITH POWER APPLIED!!

DO NOT PLUG OR UNPLUG SPD-32M DRIVER WITH POWER APPLIED!!

6.4. SPD-32M Idle Current Adjustment

The SPD-32M mini stepping module has an adjustable idle current used for holding torque when the SPD-32M motor drive is idle. The idle current adjustment is made by, inserting jumpers on header H1.

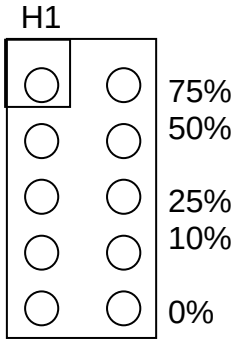

Without any jumpers inserted on H1 the idle current is the same as the running current. The minimum idle current is selected with all jumpers inserted on H1. To select the proper idle current for your application, insert the needed jumpers on H1. Reduction of current is on % of running current.

6.5. SPD-32M Motor Connections

The SPD-32M driver is designed to drive four, six or eight lead stepping motors. For motor leads color codes see Section 3.4.

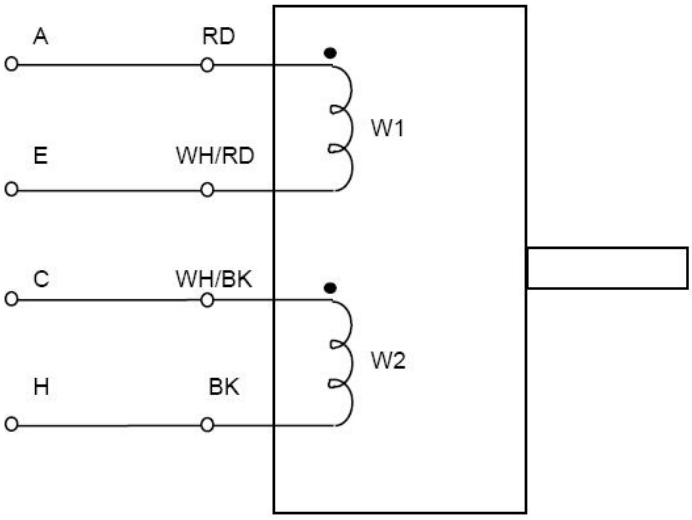

FIGURE 6.1- FOUR LEAD STEPPING MOTOR CONNECTION FOR SPD-32M BI-POLAR DRIVER.

Color Code is for Slo-Syn Motors. Reverse wires of windings W2 or W1 for motor rotation reversal.

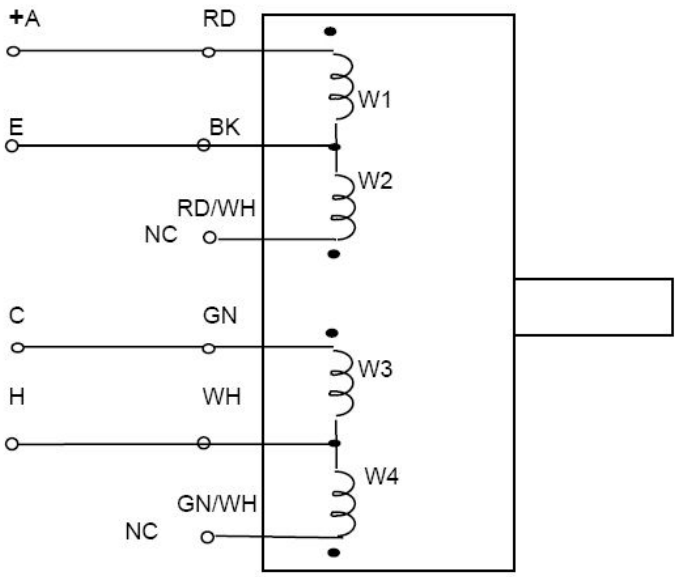

FIG. 6.2 FOUR PHASE - SIX LEAD STEPPING MOTOR, FULL WINDING CONNECTION FOR SPD-32M BI-POLAR DRIVER MODULE, HALF WINDING CONNECTION.

Color code is for Slo-Syn Motors.

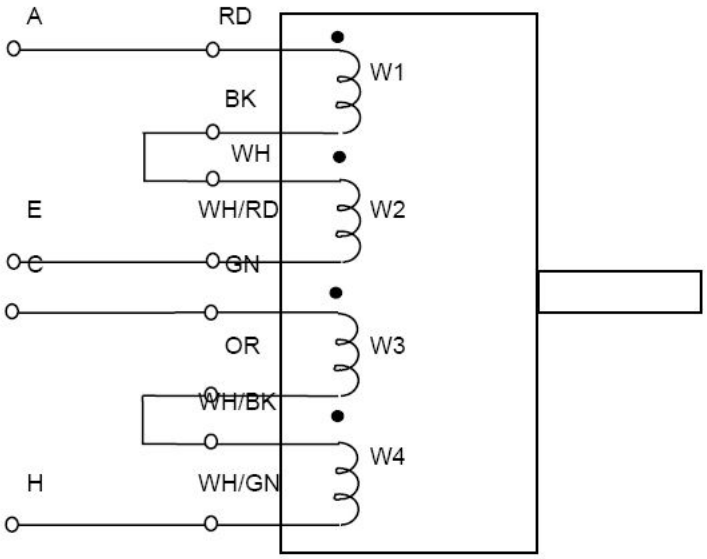

FIG. 6.3 FOUR PHASE - EIGHT LEAD STEPPING MOTOR CONNECTION TO SPD-32M BI-POLAR DRIVER MODULE, SERIES CONNECTION.

Color Code is for Slo-Syn Motors.

7. SPD-35 Stepping Motor Driver Module

7.1. Description

The SPD-35 is a bipolar chopper stepping motor driver. It drives five phase motors in the “pentagon” type connection.

Motor winding currents are compared to preset values. When the motor current reaches the preset value, it is turned off and starts decaying to a preset low value when it is turned on again.

When the motor is held at position, some switching electrical noise is generated.

7.2. Specifications

Part Number:	SPD-35
Physical Size:	Module, 1.7” wide, 7.0” high, 13.0” deep
Module Connection:	Via 80 pin PCB type edge connector
Power:	48 VAC
Motor Connection:	Five or ten lead stepping motor
Current Selector:	Front panel ten position switch
Current Setting:	.1, .2, ..4, .6, .8, 1, 1.5, 2, 2.5, 3, Amps/phase
Step Resolution:	Full step, half step
Automatic Current Reduction:	Internal jumper selection, 0%, 25%, 50%, 75%,
Motor Current OFF:	Front panel slide switch
Limits Input:	Two inputs, used for front panel limits status display
Home Input:	One input, used for front panel home status display
Status Output:	TTL, HI when normal

Note: When installing or removing driver modules, or changing motors, equipment rack must be powered down.

WARNING!!

DO NOT CONNECT OR DISCONNECT MOTOR LEADS WITH POWER APPLIED!!

DO NOT PLUG OR UNPLUG SPD-35 DRIVER WITH POWER APPLIED!!

7.3. Front Panel Description

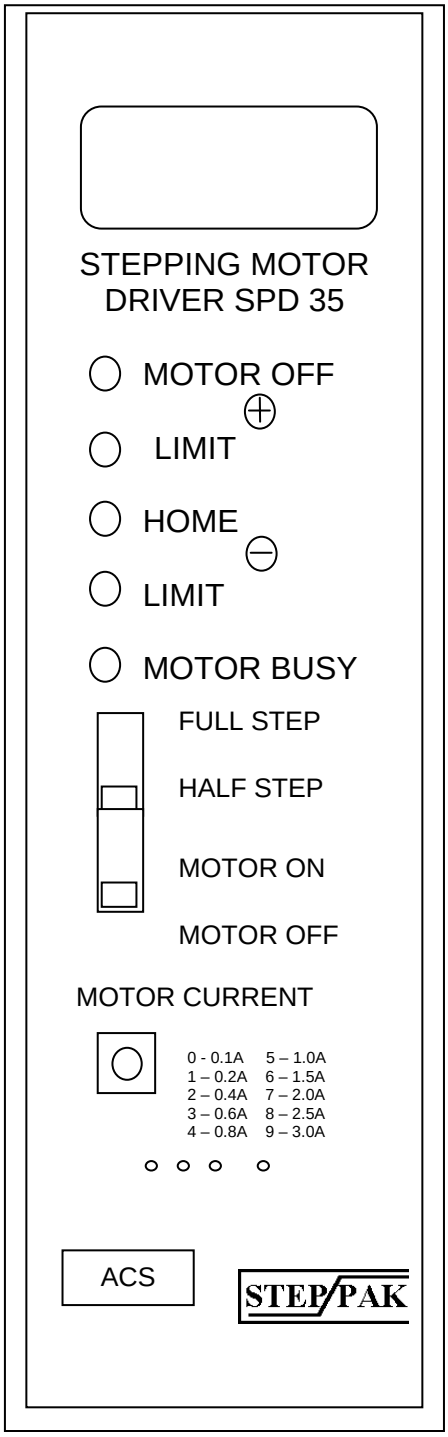

FIGURE 7.1 SPD-35 FRONT PANEL LAYOUT

The rectangular white area on top of the front panel can be used to identify the usage of the particular module. It can be marked with pencil or marker.

"Motor OFF" LED is on whenever the motor is switched off by motor On/Off switch. "Status" output also goes low, signaling external indexer of host computer the motor off status.

"Limit +", "Home", "Limit -" LEDs are off whenever the corresponding input is open. These inputs do not stop the motor by itself.

"Motor Busy" LED is on whenever the motor is stepping.

Full Step/Half Step slide switch controls Full/Half Step mode of operation. To change the mode, motor winding current must of OFF

Motor On/Off slide switch turns on or off motor winding current.

Motor Current Selector switch is used to set the motor current when stepping. A small screwdriver is needed to change the setting. RMS current value changes with the motor loading.

WARNING!!
DO NOT CONNECT OR DISCONNECT MOTOR LEADS WITH POWER APPLIED!!
DO NOT PLUG OR UNPLUG SPD-35 DRIVER WITH POWER APPLIED!

Switch Setting	Current
0	01.A
1	0.2A
2	0.4A
3	0.6A
4	0.8A
5	1.0A
6	1.5A
7	2.0A
8	2.5A
9	3.0A

TABLE 7.1 MOTOR CURRENT SELECTION

Motor current selector switch is used to set peak motor winding current. It is a 10 position rotary switch. When changing the current or step mode, the motor switch has to be in “Motor Off” position.

7.4. SPD-35 Idle Current Adjusment

The SPD-35 module has an adjustable idle current used for holding torque when the SPD-35 motor drive is idle. The idle current adjustment is made by, inserting jumpers on header H1.

Without any jumpers inserted on H1 the idle current is the same as the running current. To select the proper idle current for your application, insert the needed jumpers on H1. Reduction of current is on % of running current.

7.5. SPD-35 Motor Connections

The SPD-35 driver is designed to drive five or ten lead five phase stepping motors.

SPR-9 Motor Connector Five Phase “Pentagon” Motor

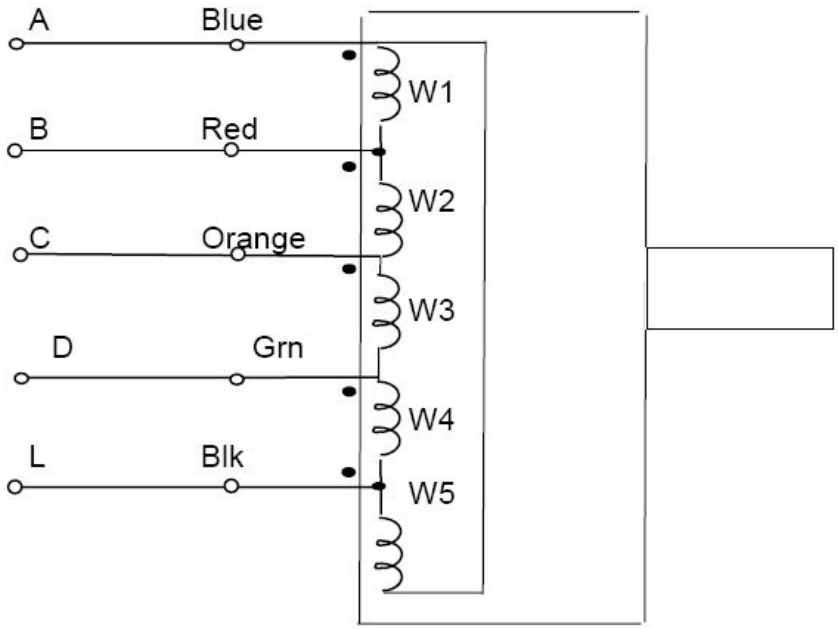

FIGURE 7.2 FIVE PHASE – FIVE LEAD STEPPING MOTOR.

Color code is for Vexta Motors

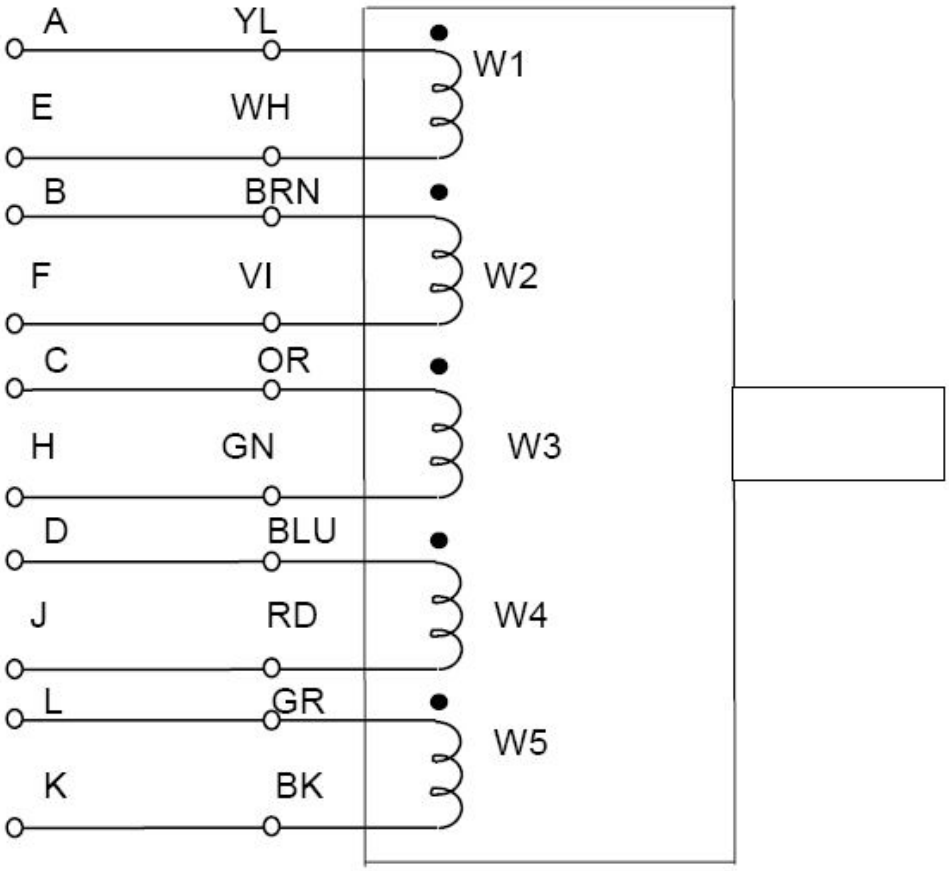

FIGURE 7.3 FIVE PHASE – TEN LEAD STEPPING MOTOR CONNECTION TO SPD-35 DRIVER MODULE.

Color code is for Berger Lahr and SKC Stepping Motors.

8. SPD-5F Stepping Motor Driver Module

8.1. Description

The SPD-5F is a high efficiency and high performance stepping motor driver. The SPD-5F can drive three, four or five phase stepping motors. The proprietary unipolar bilevel design provides absolutely minimum motor and driver losses which result in cool running motors and drivers. This enables high density packaging of the equipment.

Low DC voltage is applied to the motor windings when the motor is positioned. High voltage is applied synchronously with motor steps for fast acceleration and high running torque. Most of the switching losses which are inherent in chopper type drives are eliminated resulting in cooler motors.

Another benefit of the bilevel type motor drive is reduction of radiated electrical noise, which is quite critical for many scientific types of data acquisition installations. When the motor is held at position, no currents are interrupted, therefore, there are no radiated electromagnetic fields, which can interfere with measurements.

8.2. Specifications

Part Number:	SPD-5F
Physical Size:	Module, 1.7” wide, 7.0” high, 13.0” deep
Module Connections:	All connections are via 80 pin PCB type edge connectors.
Power Connection:	48VAC
Motor Connection:	Four or six lead, three phase stepping motors Five, six or eight lead, four phase stepping motors Six or ten lead, five phase stepping motors
Limits Input:	Two inputs, used for front panel limits status display.
Home Input:	One input, used for front panel home status display.
Idle Current Setting:	Internal low voltage jumper setting, depends on motor used and holding torque required.
Nominal Low Voltages:	Four, six, eight, ten volts.
Running Current Setting:	Front panel selectable; 0.5, 1, 2, 3, 4, 5, 6, Amps/motor
Status Output:	TTL, Hi when normal.

Note: When plugging or unplugging the SPD-5F modules under power, make sure that the front panel motor ON/OFF switch is in the OFF position. The same is important when connecting or changing the motors. It is recommended to power down the equipment rack when changing motors or modules.

8.3. Front Panel Description

FIGURE 7.1 SPD-5F
FRONT PANEL LAY OUT

The rectangular white area on top of the front panel can be used to identify the usage of the particular module. It can be marked with pencil or marker.

“Motor Off” LED is on whenever the motor is switched off by motor On/Off switch. “Status” output also goes low, signaling external indexer or host computer the motor off status.

“Limit +”, “Home”, “Limit -” LEDs are on whenever the corresponding input is open. These inputs do not stop the motor by itself.

“Motor Busy” LED is on whenever the motor is stepping.

Full Step/Half Step slide switch controls Full/Half step mode of operation. To change the mode, motor winding current must be OFF.

Motor On/Off slide switch turns on or off motor winding current.

Motor Current Selector switch is used to set the motor current when stepping. A small screwdriver is needed to change the setting. Peak current selection are 0.5, 1, 2, 3, 4, 5, 6 Amp/Motor. RMS current value changes with the motor loading. Position 7 sets 7 Amp/Phase. It can be used when motor duty cycle is low (low motor stepping/idle ratio). Positions 8 and 9 are the same as positions 0 and 1 respectively.

8.4. SPD-5F Motor Connections

Motors are connected to the SPD-5F driver module via 20 pin connectors J1 to J8 on the backplane of the SPR-9 equipment rack. Four phase motor are connected identically as the SPD-6U type driver. Refer to Figures 7.1 to 7.3 for typical motor connections.

SPR-9
MOTOR CONNECTOR FIVE PHASE MOTOR

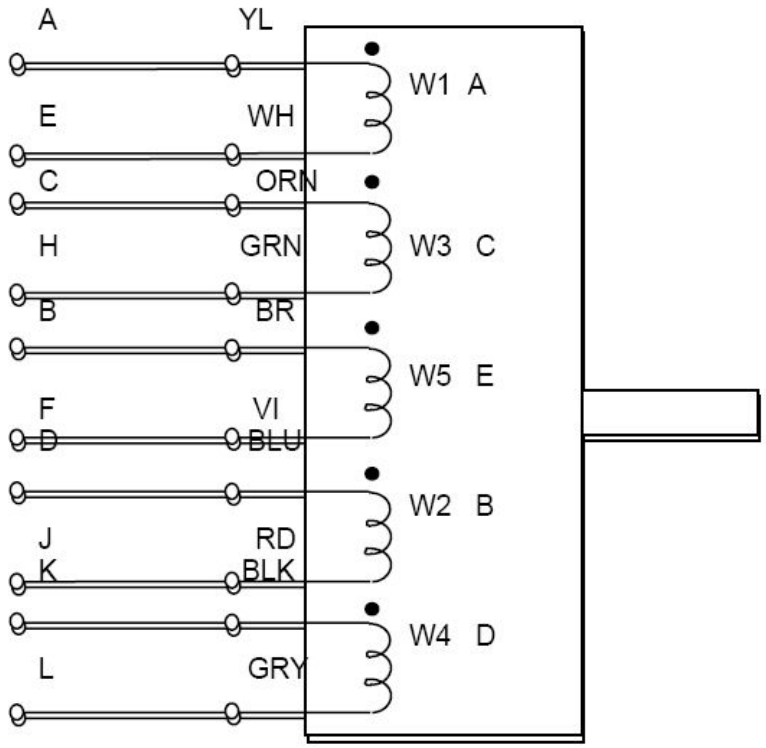

FIG. 8.1 FIVE PHASE - TEN LEAD STEPPING MOTOR CONNECTION TO SPD-5F DRIVER MODULE.

Color code is for Berger-Lahr and SKC Stepping Motors. Swap windings W3 and W4, also W2 and W5 for Motor rotation reversal.

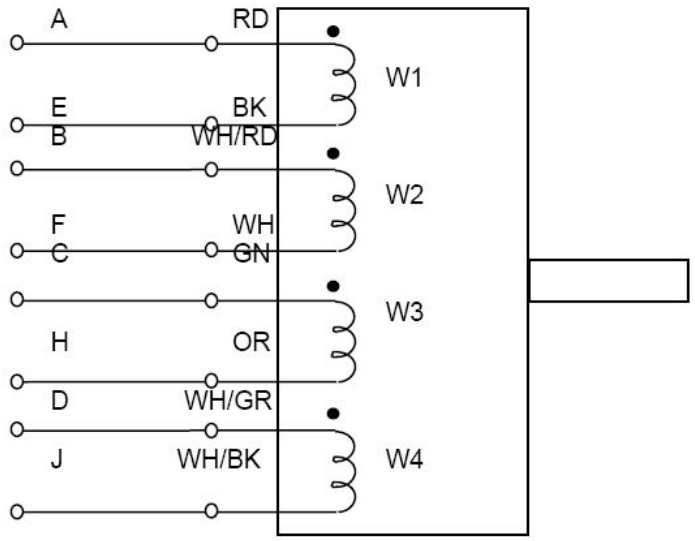

FIG. 8.2 FOUR PHASE - EIGHT LEAD STEPPING MOTOR CONNECTION TO SPD-5F DRIVER MODULE.

Color Code is for Slo-Syn Stepping Motors. Swap Winding W3 with W4 for Motor rotation reversal.

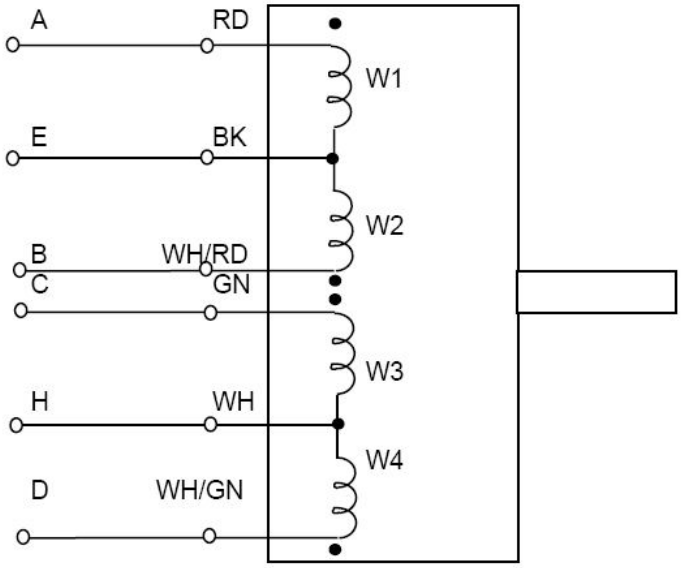

FIG. 8.3 FOUR PHASE - SIX LEAD STEPPING MOTOR CONNECTION TO SPD5F DRIVER MODULE.

Color Code is for Slo-Syn Stepping Motors. Swap Winding W3 with W4 for Motor rotation reversal.

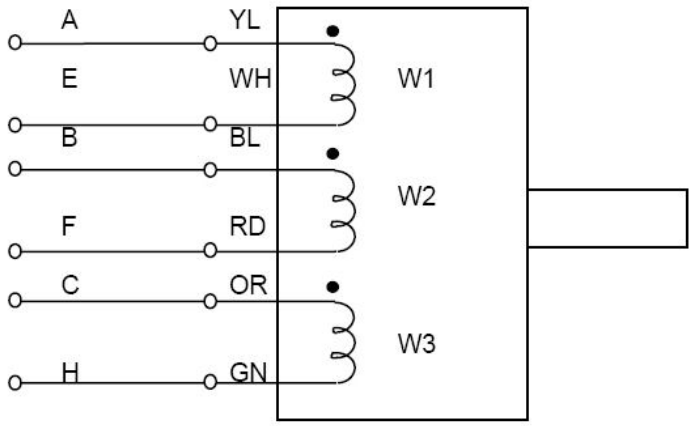

FIG. 8.4 THREE PHASE - SIX LEAD STEPPING MOTOR CONNECTION TO SPD-5F DRIVER MODULE.

Swap Windings W2 and W3 for motor rotation reversal. Color Code is for Berger-Lahr Motors.

8.5. Internal Adjustments

The output of the low voltage power supply is adjusted internally, which sets motor idle current. Four quick disconnect PCB type lugs, marked with 4, 6, 8, 10 are selection points. Four giving nominal four volts output, ten for ten volts output. To increase the motor current move quick disconnect lug to higher voltage value.

Small motors with less current requirement can also be used with SPD-5F driver module. Current is reduced by inserting current limiting resistor in the motor windings, location R51 on the PC Board. Wire jumper is factory installed at this location.

Trim pot R19 is factory preset and is not to be readjusted. It controls peak motor currents.

JUMPERS J2 AND J3 DEFINE SEQUENCE OF MOTOR WINDING SWITCHING PER TABLE 1

J2	J3	MOTOR
ON	ON	FIVE PHASE
ON	OFF	FOUR PHASE
OFF	ON	THREE PHASE
OFF	OFF	THREE PHASE

8.6. Motor Current Adjustment Procedure

Motor Current Adjustment is important for smooth motor operation. It greatly depends on the type and size of the motor, friction, inertia, and mechanical resonance of the load, and duty cycle of operation. At all times the motor temperature must be within specified temperature limits. When adjusting the motor current and testing the operation, the mechanical load is to be coupled to the motor.

Start with factory settings i.e. 4 volts for low voltage, and 0.5 Amp front panel setting for motor current. Increase motor current setting until motor starts operating reliably. Increase low voltage, if needed. Operate motor as it will operate in your application and check the motor temperature.

8.7. SPD-5F Edge Connector Assignments

SPD-5F Edge Connectors

Pin		Pin	
A1	48 VAC	B1	48 VAC
A2	“” “	B2	“” “”
A3	“” “”	B3	“” “”
A4	“” “”	B4	“” “”
A5	“” “”	B5	“” “”
A6	48 VAC Return	B6	48 VAC Return
A7	“” “”	B7	“ “”
A8	“” “”	B8	“” “”
A9	“” “”	B9	“” “”
A10	“” “”	B10	“” “”
A11	Motor Phase 1	B11	Motor Phase 1
A12	“” “”	B12	“” “”
A13	Motor Phase 1 Return	B13	Motor Phase 1 Return
A14	“” “”	B14	“” “”
A15	Motor Phase 2 Return	B15	Motor Phase 2 Return
A16	“” “”	B16	“” “”
A17	Motor Phase 2	B17	Motor Phase 2
A18	“” “”	B18	“ “”
A19	Motor Phase 5	B19	Motor Phase 5
A20	“” “”	B20	“” “”
A21	Motor Phase 3	B21	Motor Phase 3
A22	“” “”	B22	“” “”
A23	Motor Phase 3 Return	B23	Motor Phase 3 Return
A24	“” “”	B24	“” “”
A25	Motor Phase 4 Return	B25	Motor Phase 4 Return
A26	“ “”	B26	“” “”
A27	Motor Phase 4	B27	Motor Phase 4
A28	“” “”	B28	“” “”
A29	Motor Phase 5 Return	B29	Motor Phase 5 Return
A30	“” “”	B30	“” “”
A31	Motor Power Comm.	B31	Motor Power Comm.
A32	Home - M	B32	Home - M
A33	Limit -	B33	Limit -
A34	Limit +	B34	Limit +
A35	NC	B35	NC
A36	NC	B36	NC
A37	Direction	B37	Direction
A38	Step	B38	Step
A39	Status	B39	Status
A40	Logic Gnd	B40	Logic Gnd

9. SPI-8 Indexer Module

9.1. Description

The SPI-8 is an eight channel indexer/controller which plugs into the interface slot of the SP system enclosure (SPR-9).

The controller provides step and direction output for up to eight motor drive modules, which are plugged into the SP system enclosure.

Home, Limit +, and Limit - inputs are available for each channel.

Additionally, the SPI-8 supports eight status inputs and eight control outputs available via front panel connectors.

Communication with the host computer is via RS232 or RS485 communication ports. Control messages are asynchronous, ASCII characters.

Driver “Status” outputs are also monitored. “Status” level is Hi when normal. It goes low when a particular driver module is not plugged in, or a motor is switched off by a front panel switch, or one of the power supplies is not present (burned fuse or component failure).

9.2. SPI-8 Specification

Part Number:	SPI-8
Number of Index Channels:	Eight
Position Range:	±8,388,608 steps
Acceleration Range:	1 - 65000 steps (some limitations apply).
Acceleration Ramp:	Linear
Step Rate:	24 to 40,000 step/sec.
Limits Inputs:	Two per channel loop normally closed
Limits Electrical:	Optoisolated 10mA current sink required.
Home Input:	One per channel current loop normally closed.
Home Electrical:	Optoisolated, 10mA current sink required.
Status Inputs:	One per channel, normally Hi, TTL compatible
External Inputs:	Eight, optoisolated, 10mA current sink required
External Outputs:	Eight, optoisolated, 10mA current sink capability.
Communication Port:	RS232, RS485
Communication Rate:	1200, 2400, 9600, 19200 BPS
Power Required:	48 VACPanel Controls and Connections

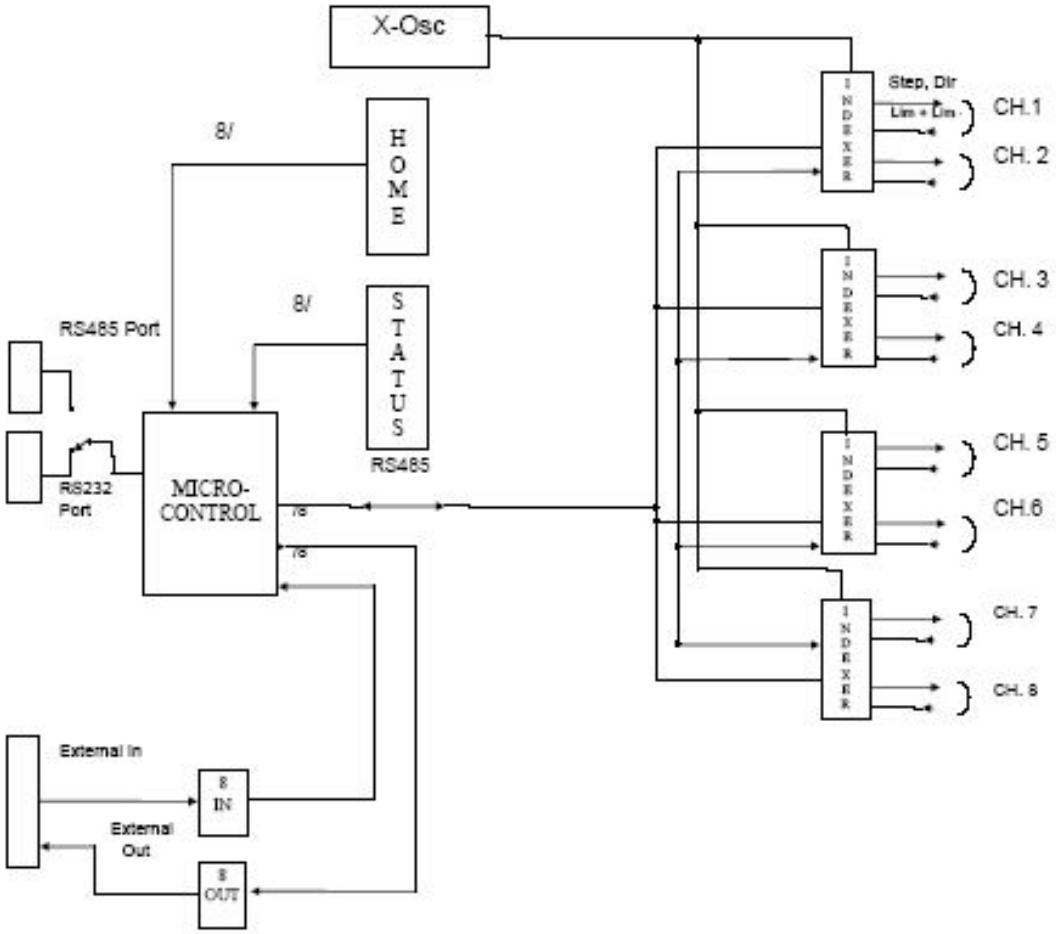

FIG. 9.1 SPI-8 INDEXER BLOCK DIAGRAM

9.3. SPI-8 Front Panel Controls and Connections

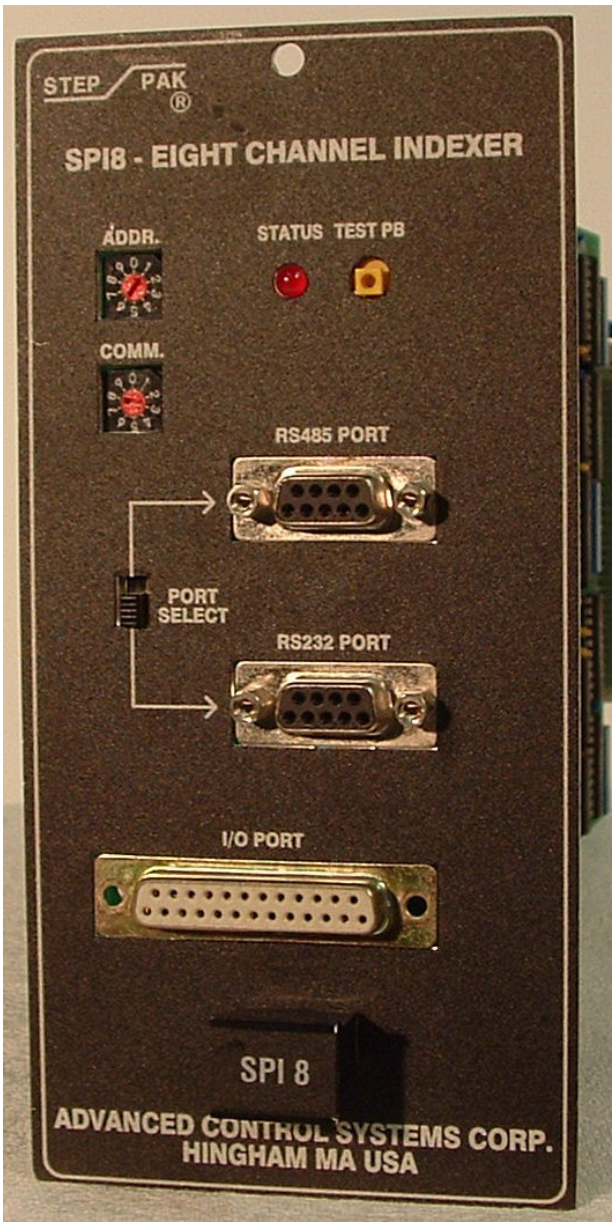

FIGURE 9.2 SPI-8 FRONT PANEL LAYOUT

Status LED

Visual indication of indexer module operation. Blinking LED indicates normal operation of the control processor. LED goes steady on for about a second when the control message is received and properly decoded. No blinking LED or steady on LED indicates failure of the SPI-8 indexer module.

Test Push Button

SPI-8 indexer module will output a test message on the communication port when test push-button is depressed. The button is recessed.

External I/O Connector

Provides connection to 8 general purpose status inputs, and 8 control outputs; accessible to host computer. D type connectors, 25 pins.

Serial Port Connectors

RS232, RS485, D type connector. 9 pins, female.

Serial Port Selector Switch

Slide switch selects either RS232 or RS485 communication port.

Address Switch

Selects first digit of motor driver address, second digit is set by location in the SPR-9 equipment rack. Range 0-9.

Communication Switch

Selects communication parameters.

Setting	Function
0	1.2 Kbaud No Parity
1	2.4 “” “”
2	9.6 “” “”
3	19.2 “” “”
4	1.2 “” Even Parity
5	2.4 “”
6	9.6 “”
7	19.2 “”
8	Same as Pos. 0
9	Same as Pos. 1

Serial Port - RS-232; Pin Assignment

Pin	Dir	Function	Pin	Dir	Function
1		NC	6		NC
2	IN	RX	7		NC
3	OUT	TX	8		NC
4		NC	9		NC
5		LOG. GND.			

Serial Port - RS-485; Pin Assignment

Pin	Dir	Function	Pin	Dir	Function
1		GND	6		NC
2		NC	7	OUT	DIR CONTROL
3		NC	8	IN/OUT	TX/RX
4	IN/OUT	TX/RX	9	IN/OUT	TX/RX INVERTED
5	IN/OUT	TX/RX INVERTED			

Several SPI-8 indexers can be daisy chained via RS-485 ports, and controlled by a single RS-485 or RS-232 communication port.

When communication is via RS-485 port, all indexers must have RS-485 port selected.

When communication is via RS-232 port only, the SPI-8 which is connected to the host computer has the selector switch set for RS-232. The rest of the indexers have RS-485 selection.

External I/O Connector; Pin Assignment

Pin	Dir	Function	Pin	Dir	Function
1	OUT	+5V DC	14	OUT	+5V DC
2	IN	STATUS 8	15	OUT	CONTROL 8
3	IN	STATUS 7	16	OUT	CONTROL 7
4	IN	STATUS 6	17	OUT	CONTROL 6
5	IN	STATUS 5	18	OUT	CONTROL 5
6	IN	STATUS 4	19	OUT	CONTROL 4
7	IN	STATUS 3	20	OUT	CONTROL 3
8	IN	STATUS 2	21	OUT	CONTROL 2
9	IN	STATUS 1	22	OUT	CONTROL 1
10		NC	23		NC
11		NC	24		NC
12		NC	25		GND
13		GND			

9.4. SPI-8 Edge Connector Assignments

Indexer modules plug into J0 128 pin DIN type PCB connector.

DIN 128 MOTHER BOARD CONNECTOR
PIN ASSIGNMENTS

J0		J0		J0		J0	
1A	48VAC	1B	48 VAC	1C	48 VAC Return	1D	48 VAC Return
2A	NC	2B	NC	2C	M Home 8	2D	Lim 8 -
3A	NC	3B	NC	3C	Lim 8 +	3D	M Home 7
4A	NC	4B	NC	4C	Lim 7 -	4D	Lim 7 +
5A	NC	5B	NC	5C	M Home 6	5D	Lim 6 -
6A	NC	6B	NC	6C	Lim 6 +	6D	M Home 5
7A	NC	7B	NC	7C	Lim 5 -	7D	Lim 5 +
8A	NC	8B	NC	8C	M Home 4	8D	Lim 4 -
9A	NC	9B	NC	9C	Lim 4 +	9D	M Home 3
10A	NC	10B	NC	10C	Lim 3 -	10D	Lim 3 +
11A	NC	11B	NC	11C	M Home 2	11D	Lim 2 -
12A	NC	12B	NC	12C	NC	12D	Lim 2 +
13A	NC	13B	NC	13C	NC	13D	NC
14A	NC	14B	NC	14C	NC	14D	NC
15A	NC	15B	NC	15C	NC	15D	M Home 1
16A	NC	16B	NC	16C	NC	16D	Lim 1 -
17A	NC	17B	NC	17C	NC	17D	Lim 1 +
18A	NC	18B	NC	18C	NC	18D	Dir 1
19A	NC	19B	NC	19C	NC	19D	Step 1
20A	NC	20B	NC	20C	NC	20D	Status 1
21A	NC	21B	NC	21C	NC	21D	Dir 2
22A	NC	22B	NC	22C	Status 2	22D	Step 2
23A	NC	23B	NC	23C	Step 3	23D	Dir 3
24A	NC	24B	NC	24C	Dir 4	24D	Status 3
25A	NC	25B	NC	25C	Status 4	25D	Step 4
26A	NC	26B	NC	26C	Step 5	26D	Dir 5
27A	NC	27B	NC	27C	Dir 6	27D	Status 5
28A	NC	28B	NC	28C	Status 6	28D	Step 6
29A	NC	29B	NC	29C	Step 7	29D	Dir 7
30A	NC	30B	NC	30C	Dir 8	30D	Status 7
31A	NC	31B	NC	31C	Status 8	31D	Step 8
32A	Gnd	32B	Gnd	32C	Gnd	32D	Gnd

9.5. Instruction Message Processing Principles

An instruction message is a set of instructions started with a message start character and terminated with a carriage return character (↵). Individual instructions are separated by semicolons (;) or commas (,). Semicolon indicates sequential execution of the instructions, and commas indicate simultaneous execution of the instructions.

There are three different start characters which define the type of instruction message processing.

- Start character (*) directs instruction for immediate execution.
- Cross hatch (#) directs instructions into eight individual channel buffers. Executing timing is controlled by execution control instructions.
- At (@) directs instructions into all channel buffer. Execution timing is controlled by execution control instructions.
- Each reply message starts with the < character.

When the instruction requires a data reply, it is executed immediately. (P, E, M, DB, EV, OR, IR) start with * start character.

Each message begins with a start character, then a one digit unit address 0-9 where zero indicates unit disabled.

The next character is a single digit channel address 0-9.

Within each buffer instructions are executed sequentially in the order that they were entered. Execution of the next instruction starts immediately after the previous instruction is completed. Instructions, separated by commas, are executed at the same time.

@11G+200;1G+300,2I+50;1F3↵
*19X↵

This instruction message is directed into all channel execution buffers. Motor 1 moves to position +200. Then motor 1 moves to position +300, at the same time motor 2 indexes 50 steps. After completion of both motions a flag F3 is sent to the host.

All instruction messages are initially entered into the input message buffer. The message is then checked for correct structure. In case of unrecognizable instructions, the message buffer is cleared and an error response generated. The error message consists of a start character (<), unit address, channel address, question mark and a carriage return (<10?↵). An instruction message is also rejected if it can not be processed into the instruction buffers.

The indexer will respond with a ready prompt (<10R↵) when the instruction message is correctly received and processed, and the indexer is ready to accept the next message.

9.6. Instruction Structure

Individual instructions consist of a start character, unit address, channel address, one or two instruction alphabetical characters and data.

umAAdd

u - Unit address range 0-9. 0 is disable unit.

m - Channel address; range 0 to 8; 0 is the all channel address.

AA - Instruction command character; one or two alphabetical characters.

dd - Data field; not always required. Data is always numeric characters; some times
preceded by a + or - sign.

9.7. Response Messages

A response message is always generated after receiving and processing the instruction message:

When there is no data to be returned, the response <10R↵ is generated. When data is to be returned, instead of the <10R↵ response a response containing the data is returned. An equal sign indicates a data response message.

umAA=dd

u - Unit address

m - Channel address; range 0 to 8; 0 is the all channel address or no channel required
indication for board level commands such as IR, EV, etc.

AA - Repeat of the instruction command character.

dd - Data field. In case of all channel response data field consists of eight individual data
fields, separated by commas.

9.8. Instruction Groups

Buffer Execution Instructions	Type
X - Execute	*#@
S - Stop Execution	*
W - Wait	#@
T - Terminate Execution	*
F - Flag Placement	#@

Motion Instructions	Type
G - Go to absolute position	#@
H - Go Home	#@
I - Index Number of Steps	#@
L - Go to the Limit	#@
Q - Quit Motion	*

Parameter Set Instructions	Type	Range (Bytes)
A - Acceleration Distance Set	#@	2
V - Velocity Index Set	#@	2
B - Back Lash Set	#@	1
D - Delay Set	#@	1
PS - Position Set	#@	3

Examine Instructions	Type
P - Position Examine	*
E - Examine Status	*
EV - Examine Version	*
M - Motion Examine	*
DB - Data Base Examine	*

Program Flow Control	Type
MX - Macro Execute	@
MD - Macro Define	*
LX - Loop Execute	#@
LT - Loop Terminate	#@

I/O Instructions	Type
LD - Limits Disable	* (no motion)
LE - Limits Enable	* (no motion)
OH - Output HI	*#@
OL - Output LO	*#@
OW - Output Word	*#@
OR - Output Read	*
IR - Input Read	*

9.9. Instruction Set - Index

A - Acceleration Set
B - Backlash Set
C - Not Used
D - Delay
DB - Data Base Read
E - Examine Status
EV - Examine Version
F - Flag
G - Go to Absolute Position
H - Go Home
I - Index to Relative Position
IR - Input Read
IS - Input Select
J - Not Used
K - Not used
L - Go to Limit
LD - Limits Disable
LE - Limits Enable
LT - Loop Terminate
LX - Loop Execute
M - Motion Examine
MD - Macro Define
MX - Macro Execute
N - Not Used
OH - Output HI
OL - Output LO
OW - Output Word
OR - Output Read
P - Position Examine
PS - Position Set
Q- Quit Motion
R - Not used
S - Stop Execution
T - Terminate Execution
U - Not Used
V - Velocity Index Set
W - Wait
X - Execute
Y - Not Used
Z - Not Used

9.10. Instruction Set - Alphabetical Order

A - Acceleration Distance Set

Valid message start characters: #@

Instruction: #11A500↵ Response: <11R↵

Function: Unit 1, channel 1 instruction buffer is loaded with acceleration distance 500 steps. An execute (11X) instruction must be received before acceleration distance is processed from the buffer into the acceleration control register.

Note: The acceleration distance is the number of steps generated during acceleration from standstill to final velocity. The acceleration distance range is 1 to 65000.

Due to dynamic range limitations of the controller, there is a restriction on the values of acceleration ramps (A) and the time between steps (velocity index) at maximum speed (V). The following relationship must be observed:

$$512 < V/\sqrt{A} < 65536$$

This is illustrated in the table which follows:

[Steps/Sec] V

Step Rate	Velocity Index	A (min) Steps	A (max) Steps
40423	38	182	65000
38402	40	164	
30722	50	105	
25602	60	73	
21944	70	53	
19201	80	41	
17068	90	32	
15360	100	26	
7680	200	7	65000
5120	300	3	47722
3840	400	2	26843
3072	500	1	17180
2560	600	1	11930
2194	700		8765
1920	800		6711
1707	900		5302
1536	1000		4295
768	2000		1074
512	3000		477
384	4000		268
307	5000		172
256	6000		119
219	7000		88
192	8000		67
171	9000		53
153	10000		43
77	20000		10
51	30000		4
38	40000		2
31	50000		1
26	60000		1
24	70000		1

Table 9.1 Step Rate, Velocity and Acceleration Relationship

B - Back lash Set

Valid message start characters: #@

Instruction: #10B+5↵ Response: <10R↵

Function: Back lash for all channels is set to be +5 steps. Five steps are added to all moves in a positive direction. The motor stops, then moves five steps in negative direction. This way all final positions are approached from the same direction. The time between stopping and restarting of the motor is controlled by the “D” (Delay) instruction.

Instruction: #11B-4↵ Response: <11R↵

Function: Back lash for Channel 1 if set to -4. Four steps are added to all moves in negative direction. The motor stops and after a programmed delay D moves 4 steps in the positive direction.

Note: The Backlash Range is ±127 steps.

D - Delay

Valid message start characters: #@

Instruction: #11D100↵ Response: <11R↵

Function: Channel 1 Delay is set to 100 mS. Delay is inserted automatically at the end of any motion instructions for motor settling time compensation. Delay range is 0 to 250 mS.

DB - Data Base Read

Valid message start character: *

Instruction: *11DB↵ Response: <11A=500, V=1000, B=0, D=100, LE=1↵

Function: Data base for channel 1 is read/displayed channel l - acceleration is set to 500, velocity to 1000, backlash to zero steps, delay to 100mS, and limits are enabled.

E - Examine Status

Valid message start characters: *
Instruction: *12E↵ Response: <12E=0000↵

Function: Channel 2 driver status is examined. The five digits after "E" have the following meaning:

2E=10000
- Negative Limit : 0 = Off; 1 = On
- Home : 0 = Off; 1 = On
- Positive Limit : 0 = Off; 1 = On
- Motion Indicator : 0 = Standstill, 1 = Stepping
- Driver Status : 0 = Disabled, 1 = Enabled

Note 1: Driver status disabled can be caused by turning motor current OFF with the switch, missing voltage, or driver is not plugged in the rack.

Note 2: Limits and home inputs are normally pulled low; or the current loop is closed.

Instruction: *10E↵
Response: <10E=10001,10001,10001,10001,10001,11001,11001,11001↵

EV - Examine Vesion

Valid message start character: *

Instruction: *10EV↵ Response: <10EV=SPI8 08-29-96

Function: Firmware version is examined for date code.

F - Flag

Valid message start characters: #@
Instruction: #11Fn↵ Response <11R↵

Function: When this instruction is encountered in the channel buffer, the controller generates a done message <11Fn↵, "n" has a range of 1 to 8.

Note : This instruction serves for synchronization of events; to indicate to the host the state of execution in various buffers.

G - Go to Absolute Position

Valid message start characters: #@
Instruction: #12G-1000↵ Response: <12R↵

Function: Channel 2 motor is instructed to go to absolute position -1000, using preset acceleration (A) and velocity (V).

Instruction: #10G+0↵ Response: <10R↵

Function: All channels are instructed to go to absolute position 0.

H - Go Home

Valid message start character: #@

Instruction: #11H-↵ Response: <11R↵

Function: Channel 1 motor is instructed to seek its home position. It starts moving in a negative direction until it finds the hardware home input active. If the home position is not found but limit O is encountered, the motor will decelerate, stop, delay, and then start moving in a positive direction, seeking its home position. Acceleration (A) and Velocity (V) have to be preset or the last values are used.

I - Index Number of Steps

Valid message start characters: #@

Instruction: #11I+650↵ Response: <11R↵

Function: Motor 1 will index (move) for a specified number of steps in the positive direction. Velocity index and acceleration distance have to be preset or the last values are used.

Instruction: #12I-10000↵ Response: <12R↵

IR - Inputs Read

Valid message start characters: *
Instruction: *10IR↵ Response: <10IR=4C↵

Function: All inputs are read. Response for 8 inputs are two hex characters.

L - Move Until Limit is Detected

Valid message start characters: #@

Instruction: #13L+↵ Response: <13R↵

Function: Motor 3 moves in + direction at a preset velocity and acceleration until + limit input is detected; the motor then decelerates and stops.

LD - Limits Disable

Valid message start characters: #@
Instruction: #11LD↵ Response: <11R↵

Function: Limits of channel 1 are disabled

LE - Limits Enable

Valid message start characters: #@
Instruction: #11LE↵ Response: <11R↵

Function: Limits of Channel 1 are enabled.

LT - Loop Terminate

Valid message start characters: #@
Instruction: #11LT↵ Response: <11R↵

Function: This is the loop termination indicator, marking the end of an instruction sequence that is to be repeated multiple times.

LX - Loop Execute

Valid message start characters: #@
Instructions: #12LX50; 2I+50; 2I+100; 2I-150; 2LT↵ Response: <12R↵

Function: The sequence 2I+50; 2I+100; 2I-150 will be executed 50 times. The range of repeats is 1 to 250.

M - Motion Examine

Valid message start characters: *
Instruction: *10M↵ Response: <10M=00110011↵

Function: Motion status of all channels is reported 0 = not moving, 1 = stepping; channels 1 to 8.

Instruction: *12M↵ Response: <12M=0↵

Function: Motor 2 is not moving.

MD - Macro Define

Valid message start characters: *
Instruction: *10MD1; 1A500; 1V1000; 1H+↵ Response: <10R↵

Function: Macro is defined as a sequence of three instructions. This sequence is stored in a macro buffer to be recalled by a MX1 instruction.

MX - Macro Execute

Valid message start characters: @
Instruction: @10MX1↵ Response: <10R↵

Function: Macro 1 is called and loaded into macrobuffer 1 use *10X to start executing macros.

Note: 40 Macros/200 characters

OH - Output HI

Valid message start characters: *#@
Instruction: *10OH1↵ Response: <10R↵

Function: Output 1 is set to be High (Open). Outputs are 1 to 8.

OL - Output LO

Valid message start characters: *#@
Instruction: *10OL1↵ Response: <10R↵

Function: Output one is set to be Low (Closed).

OW - Output Word

Valid message start characters: *#@
Instruction: *100W=FF↵ Response: <10R↵

Function: Eight bit word is outputted on eight output lines.

OR - Output Read

Valid message start characters: *#@
Instruction: *10OR↵ Response: <10OR=8F↵

P - Position Examine

Valid message start characters: *
Instruction: *13P↵ Response: <13P=-736↵

Function: Absolute position on Channel 3 is examined.

Instruction: *10P↵
Response: <10P=+700,+0,+0,-400,-400,-100,+10,+10↵

Function: Position of all channels is reported.

PS - Position Set

Valid message start characters: #@
Instruction: #10PS+0↵ Response: <10R↵

Function: Absolute Position for all Channels is set to 0.

Instruction: #12PS-10000↵ Response: <12R↵

Function: Absolute Position of Channel 2 is set to -10000.

Q - Quit Motion

Valid message start characters: *
Instruction: *10Q↵ Response: <10R↵
Function: All Channels will decelerate immediately and stop.

Instruction: *12Q↵ Response: <12R↵

Function: Motor on Channel 2 will decelerate and stop.

S - Stop Execution

Valid message start characters: *
Instruction: *10S↵ Response: <10R↵

Function: Execution in all nine execution buffers will stop. Motions in progress are not interrupted.

Instruction: *12S↵ Response: <12R↵

Function: Execution in buffer 2 is stopped. X instruction restarts execution.

T - Terminate Execution

Valid message start characters: *

Instruction: *10T↵ Response: <10R↵

Function: Execution in all buffers is stopped. Buffers are cleared. Motions in progress are not interrupted.

V - Velocity Index Set

Valid message start characters: #@

Instruction: #11V1000↵ Response: <11R↵

Function: Velocity index for channel 1 is set to 1000. Velocity index is defined as the number of time units between steps. Time units are .651mS. The velocity index range is 40 to 65000. See Table 1 (A instruction) for relationship between the velocity index and step rate.

W - Wait

Valid message start characters: #@

Instruction: #12W200↵

Function: Execution in buffer 2 is suspended for 200mS. Range is 1 to 65000mS.

X - Execute

Valid message start characters: *#@

Instruction: *10X↵ Response: <10R↵

Function: Start execution in all nine buffers. Buffers can be preloaded and then executed at the same time.

Instruction: *19X↵ Response: <19R↵

Function: Execution in Buffer 9 (all channel buffer) is started.

10. SPC-1 Interface Module

FIGURE 10.1SPC-1
FRONT PANEL LAYOUT

10.1. Description

The SPC-1 Interface Module provides direct interface to the Oregon Micro Indexer model #VME-58-8S. Differential receivers are used for connection to differential encoder outputs. Jumper option is provided for single board encoder outputs.

10.2. SPC-1 Front Panel Connector

See Figure 9.1 SPC-1 Front Panel Layout. Front Panel connections are made via a single 100 Pin high density connector. The mating plug part # is AMP 749621-9 with a 749081-1 hood and strain relief. The +5VDC power is provided by the indexer.

10.3. Internal Jumper Options

SPC-1 Module provides on board jumper option for conversion of differential inputs of the PHA, PHB, Index receivers into single ended inputs. Refer to Table 9.1. Jumper installed converts differential input into single ended.

ENCODER SIGNAL	HEADER	JUMPER
CH.1 INDEX	H1	1-2
CH.1 PH.B	H1	3-4
CH.1 PH.A	H1	5-6
CH.2 INDEX	H2	1-2
CH.2 PH.B	H2	3-4
CH.2 PH.A	H2	5-6
CH.8 INDEX	H8	1-2
CH.8 PH.B	H8	3-4
CH.8 PH.A	H8	5-6

Note: Installed jumper converts differential receiver into single ended receiver. To be used with single ended (TTL) encoder outputs.

10.4. SPC-1 Input/Output Connector; Pin Assignments

PIN #	FUNCTION	PIN #	FUNCTION
1	STATUS 1	51	+5VDC
2	STATUS 3	52	STATUS 2
3	STATUS 5	53	STATUS 4
4	STATUS 7	54	STATUS 6
5	NC	55	STATUS 8
6	NC	56	NC
7	NC	57	NC
8	NC	58	GND
9	GND	59	+5VDC
10	PHA1	60	GND
11	PHB1	61	INDEX 1
12	DIR1	62	STEP 1
13	NC	63	LIM1+
14	MHOME1	64	LIM1-
15	PHA2	65	INDEX2
16	PHB2	66	STEP2
17	DIR2	67	LIM2+
18	NC	68	LIM2-
19	MHOME2	69	+5VDC

20	GND	70	GND
21	PHA3	71	INDEX3
22	PHB3	72	STEP3
23	DIR3	73	LIM3+
24	NC	74	LIM3-
25	MHOME3	75	INDEX4
26	PHA4	76	STEP4
27	PHB4	77	NC
28	DIR4	78	LIM4+
29	MHOME4	79	LIM4-
30	GND	80	+5VDC
31	PHA5	81	GND
32	PHB5	82	INDEX5
33	DIR5	83	STEP5
34	NC	84	LIM5+
35	MHOME5	85	LIM5-
36	PHA6	86	INDEX6
37	PHB6	87	STEP6
38	DIR6	88	LIM6+
39	NC	89	LIM6-
40	MHOME6	90	+5VDC
41	GND	91	GND
42	PHA7	92	INDEX7
43	PHB7	93	STEP7
44	DIR7	94	LIM7+
45	NC	95	LIM7-
46	MHOME7	96	INDEX8
47	PHA8	97	STEP7
48	PHB8	98	NC
49	DIR8	99	LIM8+
50	MHOME8	100	LIM8-

10.5. SPC-1 PC Board Connector Pin Assignments

SPC-1 Module Plugs into J0 128 pin DIN type PCB Connector

J0		J0		J0		J0	
1A	48VAC	1B	48 VAC	1C	48 VAC Return	1D	48 VAC
2A	NC	2B	NC	2C	M Home 8	2D	Lim 8 -
3A	NC	3B	NC	3C	Lim 8 +	3D	M Home 7
4A	NC	4B	NC	4C	Lim 7 -	4D	Lim 7 +
5A	NC	5B	NC	5C	M Home 6	5D	Lim 6 -
6A	NC	6B	NC	6C	Lim 6 +	6D	M Home 5
7A	NC	7B	NC	7C	Lim 5 -	7D	Lim 5 +
8A	NC	8B	NC	8C	M Home 4	8D	Lim 4 -
9A	NC	9B	NC	9C	Lim 4 +	9D	M Home 3
10A	NC	10B	NC	10C	Lim 3 -	10D	Lim 3 +
11A	NC	11B	NC	11C	M Home 2	11D	Lim 2 -
12A	NC	12B	NC	12C	NC	12D	Lim 2 +
13A	NC	13B	NC	13C	NC	13D	NC
14A	NC	14B	NC	14C	NC	14D	NC
15A	NC	15B	NC	15C	NC	15D	M Home 1
16A	NC	16B	NC	16C	NC	16D	Lim 1 -
17A	NC	17B	NC	17C	NC	17D	Lim 1 +
18A	NC	18B	NC	18C	NC	18D	Dir 1
19A	NC	19B	NC	19C	NC	19D	Step 1
20A	NC	20B	NC	20C	NC	20D	Status 1
21A	NC	21B	NC	21C	NC	21D	Dir 2
22A	NC	22B	NC	22C	Status 2	22D	Step 2
23A	NC	23B	NC	23C	Step 3	23D	Dir 3
24A	NC	24B	NC	24C	Dir 4	24D	Status 3
25A	NC	25B	NC	25C	Status 4	25D	Step 4
26A	NC	26B	NC	26C	Step 5	26D	Dir 5
27A	NC	27B	NC	27C	Dir 6	27D	Status 5
28A	NC	28B	NC	28C	Status 6	28D	Step 6
29A	NC	29B	NC	29C	Step 7	29D	Dir 7
30A	NC	30B	NC	30C	Dir 8	30D	Status 7
31A	NC	31B	NC	31C	Status 8	31D	Step 8
32A	Gnd	32B	Gnd	32C	Gnd	32D	Gnd

11. SPC-2 Interface Module

FIGURE 10.1 SPC-2 FRONT PANEL LAYOUT

11.1. Description

The SPC-2 Interface Module provides three front panel connectors for connection of an eight channel external indexer/controller. Step and direction inputs are single ended and require 6mA current sinking drivers.

SPC-2 provides interconnection when no encoder inputs are used - simplified interconnect. It functions also as a direct replacement to the ACS MDU-8B Stepping Motor Driver unit.

11.2. SPC-2 Front Panel Connectors

See Figure 10.1 SPC-2 Front Panel Layout. Front panel connections are made via three 20 pin flat cable type connectors.

SPC-2 Pin Assignments.

Step, Direction Inputs Connector

PIN #	DESCRIPTION	PIN #	DESCRIPTION
1	Logic Gnd.	2	Logic Gnd.
3	M1 Direction Input	4	M1 Step Input
5	M2 “” “”	6	M2 “” “”
7	M3 “” “”	8	M3 “” “”
9	M4 “” “”	10	M4 “” “”
11	M5 “” “”	12	M5 “” “”
13	M6 “” “”	14	M6 “” “”
15	M7 “” “”	16	M7 “” “”
17	M8 “” “”	18	M8 “” “”
19	N.C.	20	N.C.

Limit Switch Outputs Connector

PIN #	DESCRIPTION	PIN #	DESCRIPTION
1	Logic Gnd.	2	Logic Gnd.
3	Limit 1+ Output	4	Limit 1- Output
5	“” “” 2+	6	“” “” 2-
7	“” “” 3+	8	“” “” 3-
9	“” “” 4+	10	“” “” 4-
11	“” “” 5+	12	“” “” 5-
13	“” “” 6+	14	“” “” 6-
15	“” “” 7+	16	“” “” 7-
17	“” “” 8+	18	“” “” 8-
19	N.C.	20	N.C.

Home, Status Input Connector

PIN #	DESCRIPTION	PIN #	DESCRIPTION
1	Log. Gnd.	2	Log. Gnd.
3	M1 Home	4	M1 Status
5	M2 “	6	M2 “
7	M3 “	8	M3 “
9	M4 “	10	M4 “
11	M5 “	12	M5 “
13	M6 “	14	M6 “
15	M7 “	16	M7 “
17	M8 “	18	M8 “
19	NC “	20	NC “

11.3. SPC-2 PC Board Connector Pin Assignments

SPC-2 Module Plugs into J0 128 pin DIN type PCB Connector

J0		J0		J0		J0	
1A	48VAC	1B	48 VAC	1C	48 VAC Return	1D	48 VAC
2A	NC	2B	NC	2C	M Home 8	2D	Lim 8 -
3A	NC	3B	NC	3C	Lim 8 +	3D	M Home 7
4A	NC	4B	NC	4C	Lim 7 -	4D	Lim 7 +
5A	NC	5B	NC	5C	M Home 6	5D	Lim 6 -
6A	NC	6B	NC	6C	Lim 6 +	6D	M Home 5
7A	NC	7B	NC	7C	Lim 5 -	7D	Lim 5 +
8A	NC	8B	NC	8C	M Home 4	8D	Lim 4 -
9A	NC	9B	NC	9C	Lim 4 +	9D	M Home 3
10A	NC	10B	NC	10C	Lim 3 -	10D	Lim 3 +
11A	NC	11B	NC	11C	M Home 2	11D	Lim 2 -
12A	NC	12B	NC	12C	NC	12D	Lim 2 +
13A	NC	13B	NC	13C	NC	13D	NC
14A	NC	14B	NC	14C	NC	14D	NC
15A	NC	15B	NC	15C	NC	15D	M Home 1
16A	NC	16B	NC	16C	NC	16D	Lim 1 -
17A	NC	17B	NC	17C	NC	17D	Lim 1 +
18A	NC	18B	NC	18C	NC	18D	Dir 1
19A	NC	19B	NC	19C	NC	19D	Step 1
20A	NC	20B	NC	20C	NC	20D	Status 1
21A	NC	21B	NC	21C	NC	21D	Dir 2
22A	NC	22B	NC	22C	Status 2	22D	Step 2
23A	NC	23B	NC	23C	Step 3	23D	Dir 3
24A	NC	24B	NC	24C	Dir 4	24D	Status 3
25A	NC	25B	NC	25C	Status 4	25D	Step 4
26A	NC	26B	NC	26C	Step 5	26D	Dir 5
27A	NC	27B	NC	27C	Dir 6	27D	Status 5
28A	NC	28B	NC	28C	Status 6	28D	Step 6
29A	NC	29B	NC	29C	Step 7	29D	Dir 7
30A	NC	30B	NC	30C	Dir 8	30D	Status 7
31A	NC	31B	NC	31C	Status 8	31D	Step 8
32A	Gnd	32B	Gnd	32C	Gnd	32D	Gnd

12. SPC-3 Interface Module

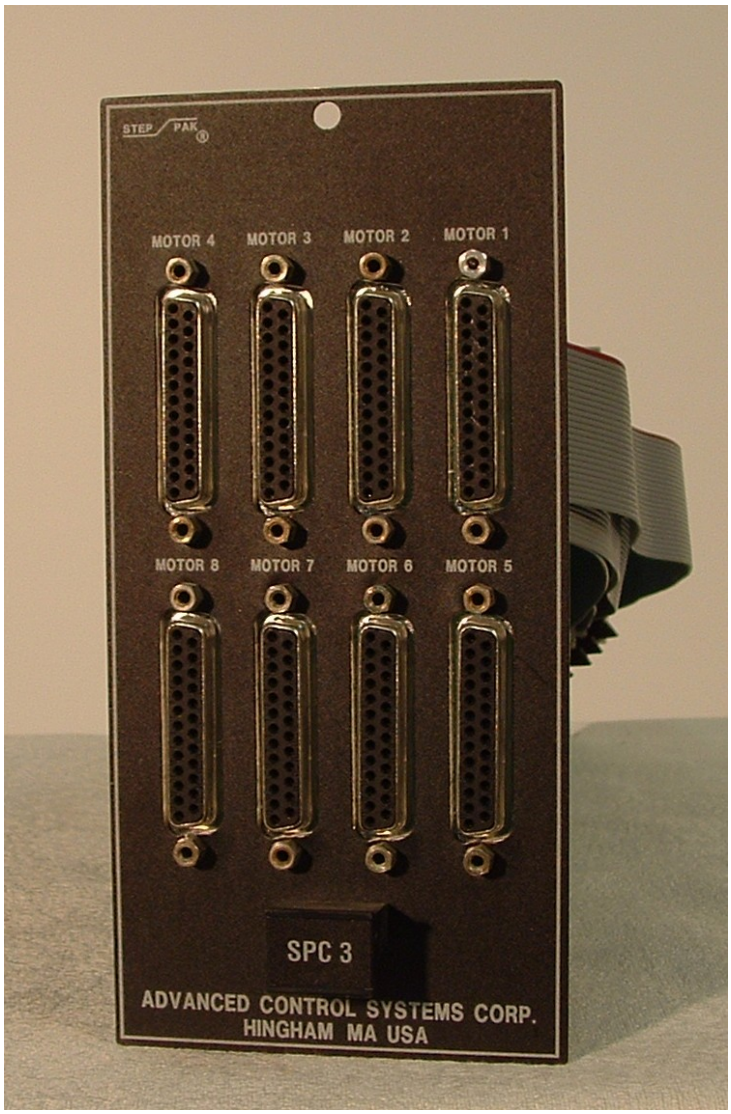

FIG. 11.1 SPC-3
FRONT PANEL LAYOUT

9.1 Description

SPC-3Interface Module provides eight front panel connectors where an eight channel external indexer/controller can be connected. It also provides differential receivers on step and direction inputs for all eight channels. Encoder outputs connected to the back panel of the SPR-9 are also brought to the front panel connectors.
SPC-3 has its own logic power supply powered from 48VAC, which provides power to the internal circuitry.

12.2. Front Panel Connections

There are eight female, 25 pin D type connectors, marked as Motor 1 through Motor 8. The following is the typical pin assignment for each of the eight connectors.

PIN	DIR	FUNCTION
1		NC (No Connect)
2		NC
3	In	Step +
4	In	Direction +
5	Out	Limit + (Normally Closed)
6	Out	Limit - (Normally Closed)\
7	Out	Encoder A +
8	Out	Encoder B +
9	Out	Index +
10	Out	M Home (motor conn.)
11		Ground/Shield
12	Out	Driver status
13		NC
14		NC
15		NC
16	In	Step -
17	In	Direction -
18		NC
19		NC
20	Out	Encoder A -
21	Out	Encoder B -
22	Out	Index -
23	Out	E Home (encoder conn.)
24		Ground/Shield
25		NC

12.3. PC Board Connector Pin Assignments

PC Board connector is 128 pin DIN type connector. The following are the pin assignments.

1A	48VAC	1B	48 VAC	1C	48 VAC	1D	48 VAC
2A	Index 8 -	2B	Index 8 +	2C	M Home 8	2D	Lim 8 -
3A	PHA 8 -	3B	PHA 8 +	3C	Lim 8 +	3D	M Home 7
4A	PHB 8 -	4B	PHB 8+	4C	Lim 7 -	4D	Lim 7 +
5A	NC	5B	E Home 8	5C	M Home 6	5D	Lim 6 -
6A	Index 7 -	6B	Index 7 +	6C	Lim 6 +	6D	M Home 5
7A	PHA 7 -	7B	PHA 7 +	7C	Lim 5 -	7D	Lim 5 +
8A	PHB 7 -	8B	PHB 7 +	8C	M Home 4	8D	Lim 4 -
9A	NC	9B	E Home 7	9C	Lim 4 +	9D	M Home 3
10A	Index 6 -	10B	Index 6 +	10C	Lim 3 -	10D	Lim 3+
11A	PHA 6 -	11B	PHA 6 +	11C	M Home 2	11D	Lim 2 -
12A	PHB 6 -	12B	PHB 6 +	12C	NC	12D	Lim 2 +
13A	Index 5 -	13B	E Home 6	13C	NC	13D	NC
14A	NC	14B	Index 5 +	14C	NC	14D	NC
15A	NC	15B	PHA 5 +	15C	NC	15D	M Home 1
16A	PHA 5 -	16B	PHB 5 +	16C	NC	16D	Lim 1 -
17A	PHB 5 -	17B	E Home 5	17C	NC	17D	Lim 1 +
18A	E Home 4	18B	PHB 4 -	18C	NC	18D	Dir 1
19A	PHB 4 +	19B	PHA 4 -	19C	NC	19D	Step 1
20A	PHA 4 +	20B	Index 4 -	20C	NC	20D	Status 1
21A	Index 4 +	21B	E Home 3	21C	NC	21D	Dir 2
22A	PHB 3 -	22B	PHB 3 +	22C	Status 2	22D	Step 2
23A	PHA 3 -	23B	PHA 3 +	23C	Step 3	23D	Dir 3
24A	Index 3 -	24B	Index 3 +	24C	Dir 4	24D	Status 3
25A	E Home 2	25B	PHB 2 -	25C	Status 4	25D	Step 4
26A	PHB 2 +	26B	PHA 2 -	26C	Step 5	26D	Dir 5
27A	PHA 2 +	27B	Index 2 -	27C	Dir 6	27D	Status 5
28A	Index 2 +	28B	E Home 1	28C	Status 6	28D	Step 6
29A	PHB 1 -	29B	PHB 1 +	29C	Step 7	29D	Dir 7
30A	PHA 1 -	30B	PHA 1 +	30C	Dir 8	30D	Status 7
31A	Index 1 -	31B	Index 1 +	31C	Status 8	31D	Step 8
32A	Gnd	32B	Gnd	32C	Gnd	32D	Gnd

13. SPC-4 Interface Module

FIG: 13.1 SPC-4
FRONT PANEL LABEL

13.0 Description

The SPC-4 Interface Module provides eight front panel RJ45 connectors where an eight channel extern indexer/controller can be connected.

Step and direction inputs are equipped with differential receivers.

Encoderoutputs are not connected. The SPC-4 Interface Module can be used whenever the encoders are not required by the control system.

The SPC-4 has its own logic power supply powered from 48VAC, which provides logic 5VDC to the internal circuitry.

13.1. SPC-4 Front Panel Connections

There are eight RJ45 connectors marked as Motor 1 through Motor 8. The following is the typical pin assignment for each of the eight connectors.

PIN	DIRECTION	FUNCTION
1	IN	STEP +
2	IN	STEP –
3	IN	DIRECTION +
4	OUT	LIM +
5	OUT	LIM –
6	IN	DIRECTION –
7	OUT	HOME
8		GROUND

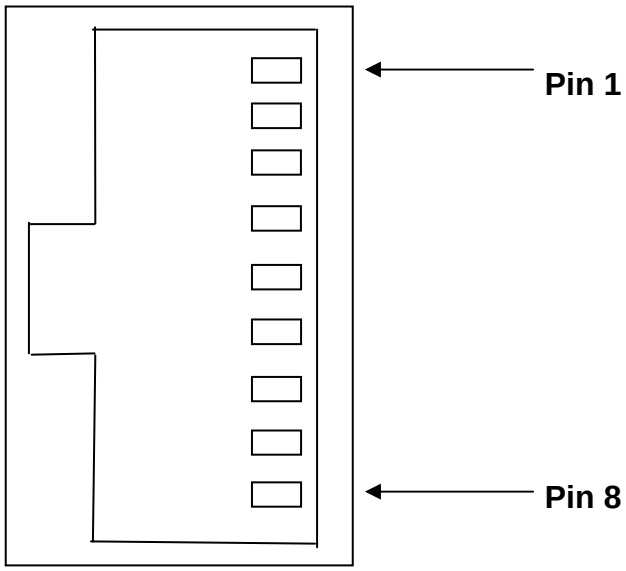

13.2. PC Board Connector Pin Assignments

PC Board connector is 128 pin DIN type connector. The following are the pin assignments.

1A	48VAC	1B	48 VAC	1C	48 VAC	1D	48 VAC
2A	NC	2B	NC	2C	M Home 8	2D	Lim 8 -
3A	NC	3B	NC	3C	Lim 8 +	3D	M Home 7
4A	NC	4B	NC	4C	Lim 7 -	4D	Lim 7 +
5A	NC	5B	NC	5C	M Home 6	5D	Lim 6 -
6A	NC	6B	NC	6C	Lim 6 +	6D	M Home 5
7A	NC	7B	NC	7C	Lim 5 -	7D	Lim 5 +
8A	NC	8B	NC	8C	M Home 4	8D	Lim 4 -
9A	NC	9B	NC	9C	Lim 4 +	9D	M Home 3
10A	NC	10B	NC	10C	Lim 3 -	10D	Lim 3+
11A	NC	11B	NC	11C	M Home 2	11D	Lim 2 -
12A	NC	12B	NC	12C	NC	12D	Lim 2 +
13A	NC	13B	NC	13C	NC	13D	NC
14A	NC	14B	NC	14C	NC	14D	NC
15A	NC	15B	NC	15C	NC	15D	M Home 1
16A	NC	16B	NC	16C	NC	16D	Lim 1 -
17A	NC	17B	NC	17C	NC	17D	Lim 1 +
18A	NC	18B	NC	18C	NC	18D	Dir 1
19A	NC	19B	NC	19C	NC	19D	Step 1
20A	NC	20B	NC	20C	NC	20D	NC
21A	NC	21B	NC	21C	NC	21D	Dir 2
22A	NC	22B	NC	22C	NC	22D	Step 2
23A	NC	23B	NC	23C	Step 3	23D	Dir 3
24A	NC	24B	NC	24C	Dir 4	24D	Status 3
25A	NC	25B	NC	25C	NC	25D	Step 4
26A	NC	26B	NC	26C	Step 5	26D	Dir 5
27A	NC	27B	NC	27C	Dir 6	27D	NC
28A	NC	28B	NC	28C	NC	28D	Step 6
29A	NC	29B	NC	29C	Step 7	29D	Dir 7
30A	NC	30B	NC	30C	Dir 8	30D	NC
31A	NC	31B	NC	31C	NC	31D	Step 8
32A	Gnd	32B	Gnd	32C	Gnd	32D	Gnd

14. SPT-8, SPT-8R Power Transformer

14.1. Description

Power transformer SPT-8 provides power to the SP Systems modules. Single phase 48 VAC nominal is distributed via heavy duty back plane to the system. Each module generates its own DC voltages as required. The transformer can be mounted anywhere within the equipment cabinet, thus reducing the front panel space requirement.

14.2. SPT-8 Specifications

Input voltage:	120 or 240 VAC, jumpers selectable
Output voltage:	48 VAC nominal
Output current:	25 Amp RMS
Physical Dimensions:	6.8”W, 7.0”D, 7.5”H
Weight:	40 lbs.
Mounting:	See Fig. 14.1

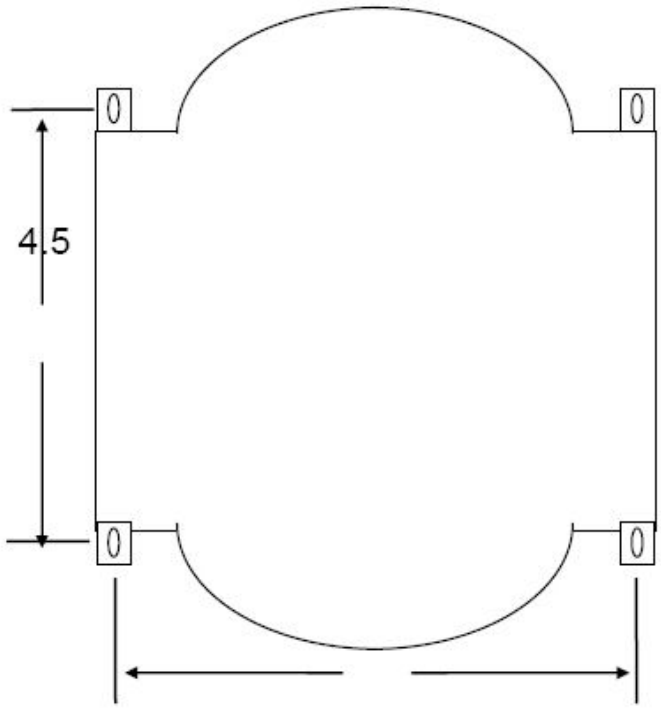

FIG. 14.1 SPT-8 POWER TRANSFORMER, TOP VIEW

14.3. SPT-8R Description

SPT-8R is the enclosed version of SPT-8 with front panel, circuit breaker, power cord,
and additional terminal strips.

14.4. SPT-8R Specifications

Input Voltage:	120 or 240 VAC, terminal strip jumper selectable
Output Voltage:	48 VAC nominal
Output Current:	25 AMP RMS
Physical Dimensions:	19” wide, 8.75” high, 9.5” deep; for mounting into a 19” rack frame
Fusing:	Circuit breaker; 30 AMP

15. SPR-9K Motor Connector Kit

Motor Connector Kit contains connector components for connecting eight motors to the SPR-9 Equipment Rack:

Connector Block……..8 pcs.
Connector Hood……..8 pcs.
Connector Pins……160 pcs.
Screws……32 pcs.

Part Numbers:	Connector Block	EDAC 516-020-000-101
	Hood	EDAC 516-230-520
	Pin	EDAC 516-290-590
	Connector With Hood	ELCO 00-8016-020-000-603
	Pin	ELCO 60-8017-03-13-00-339

16. SPD-3M Stepping Motor Driver (Discontinued!!!)

16.1. Description

The SPD-3M is a bipolar chopper type of stepping motor driver with microstepping capability.

Motor winding currents are compared to preset values. When the motor current reaches the preset value, it is turned off and starts decaying to a preset low value when it is turned on again.

When the motor is held at position, some switching electrical noise is generated.

16.2. Specifications

Part Number:	SPD-3M
Physical Size:	Module, 1.7” wide, 7.0” high, 13.0” deep
Module Connection:	Via 80 pin PCB type edge connector
Power:	48 VAC
Motor Connection:	Four or eight lead stepping motors
Current Selector:	Front panel BCD Switch
Current Setting:	0.5, 1.0, 1.5, 2.0, 2.5, 3.0, 3.5, 4.0
Microstep Selector:	Front panel hex switch
Binary Resolution:	2, 4, 8, 16, 32, 64, 128, 256 - microsteps per step
Decimal Resolution:	5, 10, 25, 50, 125, 250 - microsteps per step
Automatic Current Reduction:	Internal jumper selection
Motor Current OFF:	Front panel slide switch
Limits Input:	Two inputs, used for front panel limits status display
Home Input:	One input, used for front panel home status display
Status Output:	TTL, HI when normal

Note: When installing or removing driver modules, or changing motors, equipment rack must be powered down.

WARNING!!

DO NOT CONNECT OR DISCONNECT MOTOR LEADS WITH POWER APPLIED!!

DO NOT PLUG OR UNPLUG SPD-3M DRIVER WITH POWER APPLIED!!

16.3. Front Panel Description

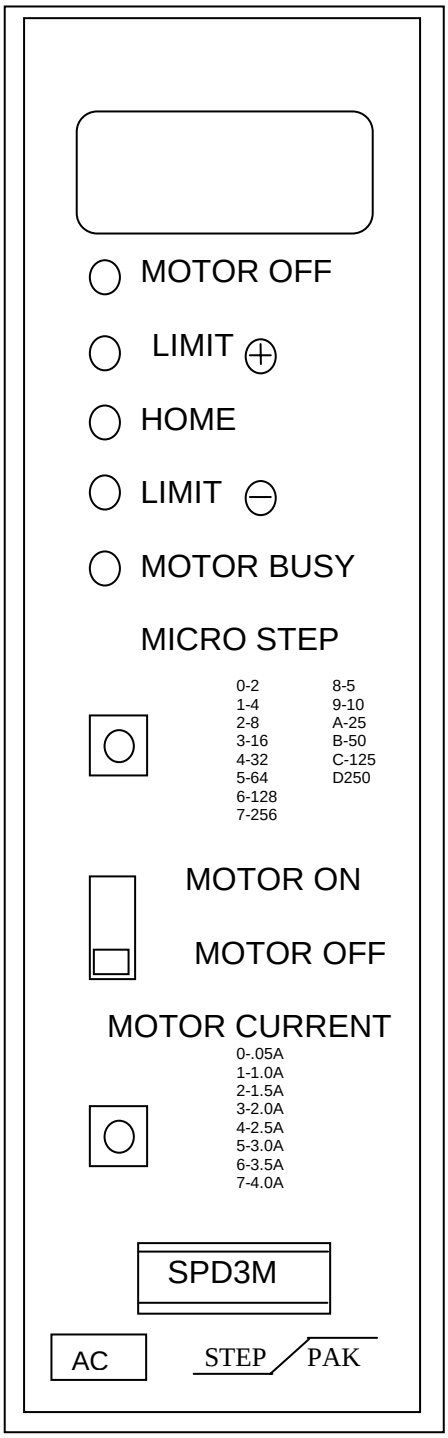

FIGURE 16.1 SPD-3M FRONT PANEL LAYOUT

See Figure 14.1 for front panel layout.

Rectangular white area on top of the front panel can be used to identify the usage of the particular module. It can be marked with pencil or marker.

“Motor OFF” LED is on whenever the motor is switched off by motor On/Off switch. “Status” output also goes low, signaling external indexer of host computer the motor off status.

“Limit +”, “Home”, “Limit -” LEDs are on whenever the corresponding input is open. These inputs do not stop the motor by itself.

“Motor Busy” LED is on whenever the motor is stepping.

“Motor On/Off” slide switch turns on or off motor winding current.

“Microstep” selector switch is used to set microstep resolution. It is a 16 position rotary hex switch.

WARNING!!
DO NOT CONNECT OR DISCONNECT MOTOR LEADS WITH POWER APPLIED!!
DO NOT PLUG OR UNPLUG SPD-3M DRIVER WITH POWER APPLIED!!

Switch Setting	Resolution (Microsteps per step)
0	2
1	4
2	8
3	16
4	32
5	64
6	128
7	256
8	5
9	10
A	25
B	50
C	125
D	250
E	NOT USED
F	NOT USED

TABLE 14.1 MICROSTEP RESOLUTION SELECTION

Motor current selector switch is used to set peak motor winding current. It is a 10 position rotary BCD switch.

Switch Setting	Current
0	0.5A
1	1.0
2	1.5
3	2.0
4	2.5
5	3.0
6	3.5
7	4.0
8	Not Used
9	Not Used

TABLE 14.2 MOTOR CURRENT SELECTION

WARNING!!

DO NOT CONNECT OR DISCONNECT MOTOR LEADS WITH POWER APPLIED!!

DO NOT PLUG OR UNPLUG SPD-3M DRIVER WITH POWER APPLIED!!

16.4. SPD-3M Idle Current Adjustment

The SPD-3M micro stepping module has an adjustable idle current used for holding torque when the SPD-3M motor drive is idle. The idle current adjustment is made by inserting jumpers on Header H1.

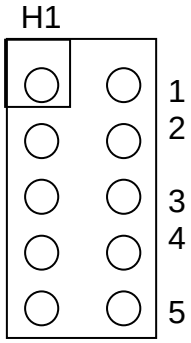

Without any jumpers inserted on H1 the idle current is the same as the running current. The minimum idle current is selected with all jumpers inserted on H1. To select the proper idle current for your application, insert the needed jumpers on H1. Position 1 is the least significant jumper in lowering the idle current. Position 5 is the most significant jumper in lowering the idle current.SPD-3M Motor Connections

The SPD-3M driver is designed to drive four, six or eight lead stepping motors. For motor leads color codes see Section 3.4

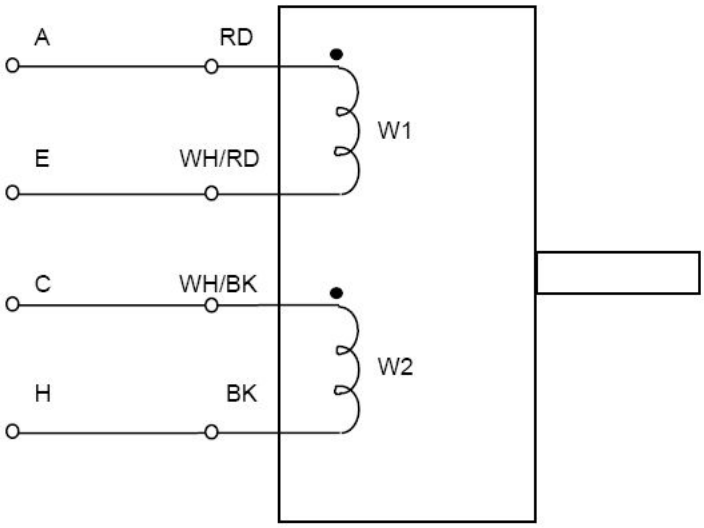

FIGURE 16.1 FOUR LEAD STEPPING MOTOR CONNECTION FOR SPD-3M BI-POLAR DRIVER.

Color Code is for Slo-Syn Motors. Reverse wires of windings W2 or W1 for motor rotation reversal.

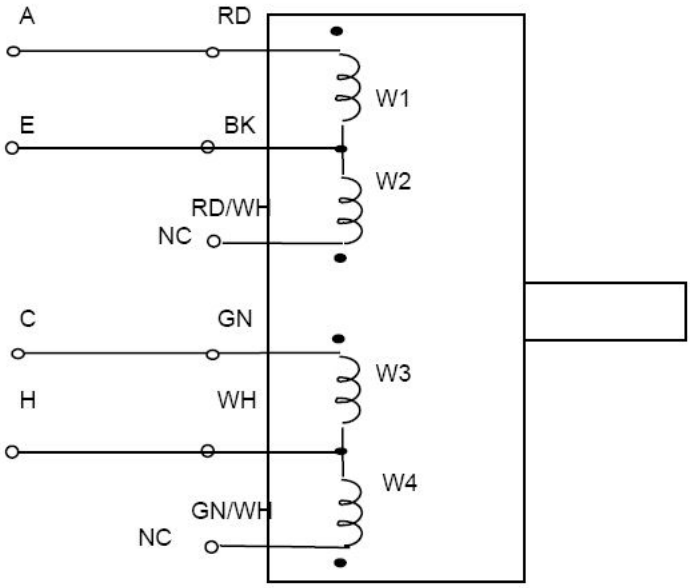

FIG. 16.2 FOUR PHASE - SIX LEAD STEPPING MOTOR, FULL WINDING CONNECTION FOR SPD-3M BI-POLAR DRIVER MODULE, HALF WINDING CONNECTION.

Color code is for Slo-Syn Motors.

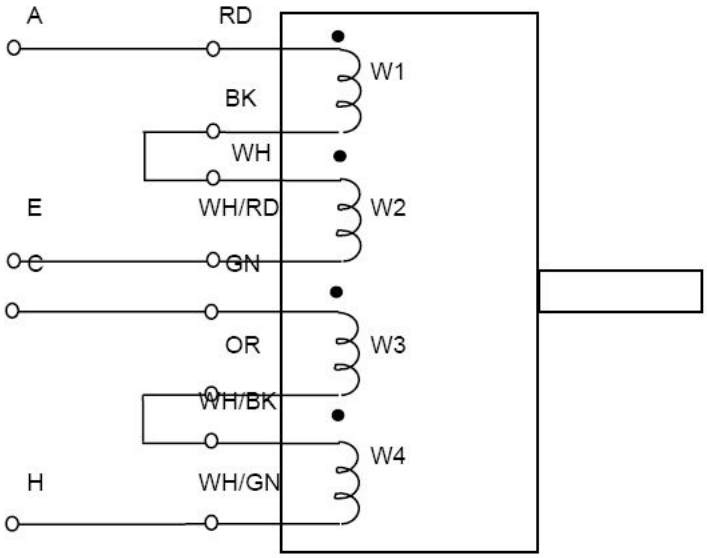

FIG. 16.3 FOUR PHASE - EIGHT LEAD STEPPING MOTOR CONNECTION TO SPD-3M BI-POLAR DRIVER MODULE, SERIES CONNECTION.

Color Code is for Slo-Syn Motors.

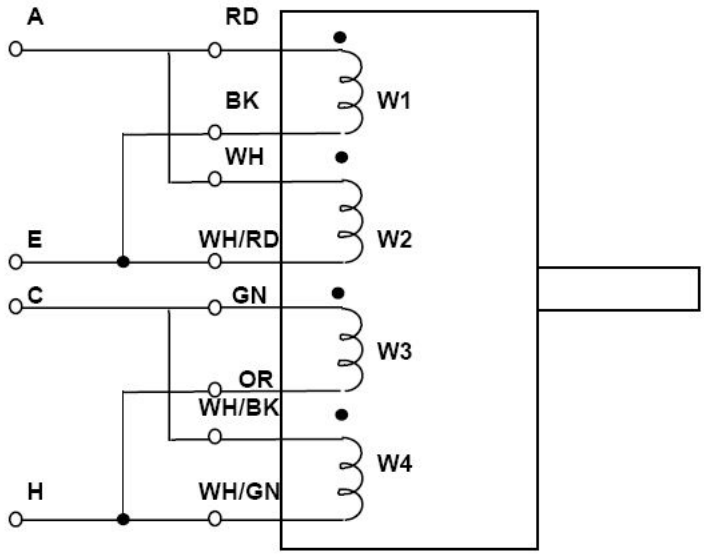

FIG. 16.4 FOUR PHASE - EIGHT LEAD STEPPING MOTOR CONNECTION TO SPD-3M DRIVER MODULE, PARALLEL CONNECTION.

Color code is for Slo-Syn Motors.

16.5. SPD-3M Edge Connector Assignments

SPD-3M (REV. B) Edge Connectors

Pin		Pin	
A1	48 VAC	B1	48 VAC
A2	“” “	B2	“” “”
A3	“” “”	B3	“” “”
A4	“” “”	B4	“” “”
A5	“” “”	B5	“” “”
A6	48 VAC Return	B6	48 VAC Return
A7	“” “”	B7	“ “”
A8	“” “”	B8	“” “”
A9	“” “”	B9	“” “”
A10	“” “”	B10	“” “”
A11	Motor Phase $\overline{B}$	B11	Motor Phase $\overline{B}$
A12	“” “”	B12	“” “”
A13	Motor Phase B	B13	Motor Phase B
A14	“” “”	B14	“” “”
A15	NC	B15	NC
A16	“” “”	B16	“” “”
A17	NC	B17	NC
A18	“” “”	B18	“ “”
A19	NC	B19	NC
A20	“” “”	B20	“” “”
A21	Motor Phase $\overline{A}$	B21	Motor Phase $\overline{A}$
A22	“” “”	B22	“” “”
A23	Motor Phase A	B23	Motor Phase A
A24	“” “”	B24	“” “”
A25	NC	B25	NC
A26	“ “”	B26	“” “”
A27	NC	B27	NC
A28	“” “”	B28	“” “”
A29	NC	B29	NC
A30	“” “”	B30	“” “”
A31	NC	B31	NC
A32	Home - M	B32	Home - M
A33	Limit -	B33	Limit -
A34	Limit +	B34	Limit +
A35	NC	B35	NC
A36	NC	B36	NC
A37	Direction	B37	Direction
A38	Step	B38	Step
A39	Status	B39	Status
A40	Logic Gnd	B40	Logic Gnd

17. MANUAL REVISION HISTORY

Step-Pak System User's Manual Revision History

Revision	Date of Issue	Section	
1.0			Original Release
1.1	8-8-05	13	Added SPC-4 Module Detail
2.0	6-21-06		Added module photo files. Locked aspect ratios of motor connection figures
2.1	8-10-06	3	Added FIG 3.6 motor connector pin assignment detail