REVISIONS					
ZONE	REV.	DESCRIPTION	BY	APPROVED	DATE

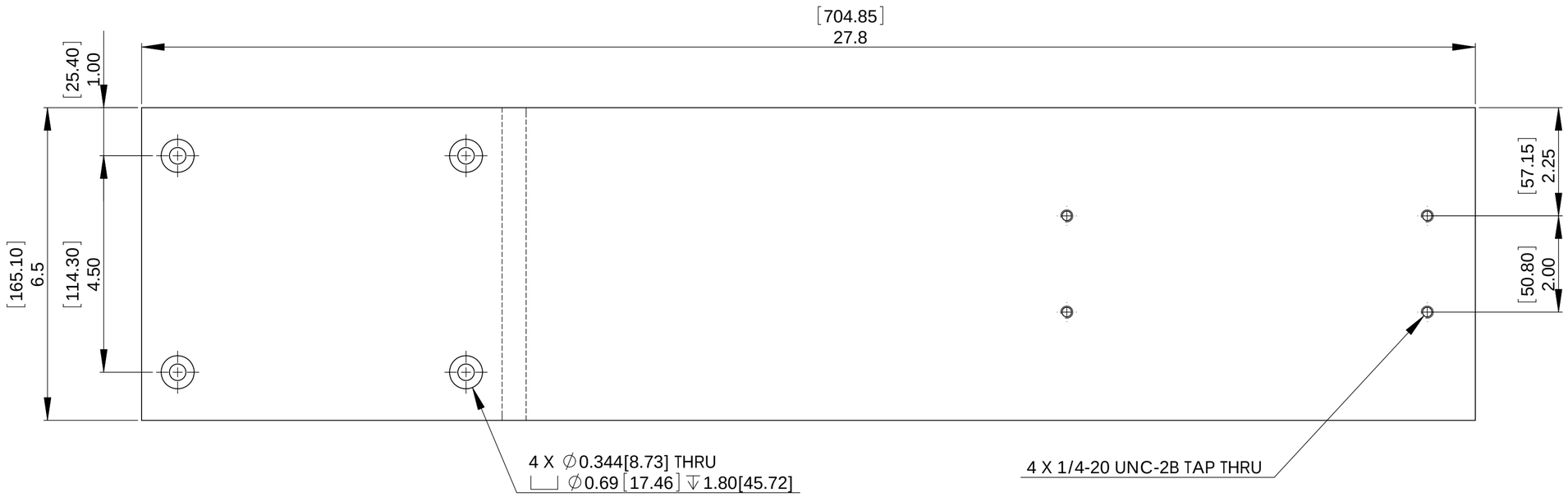

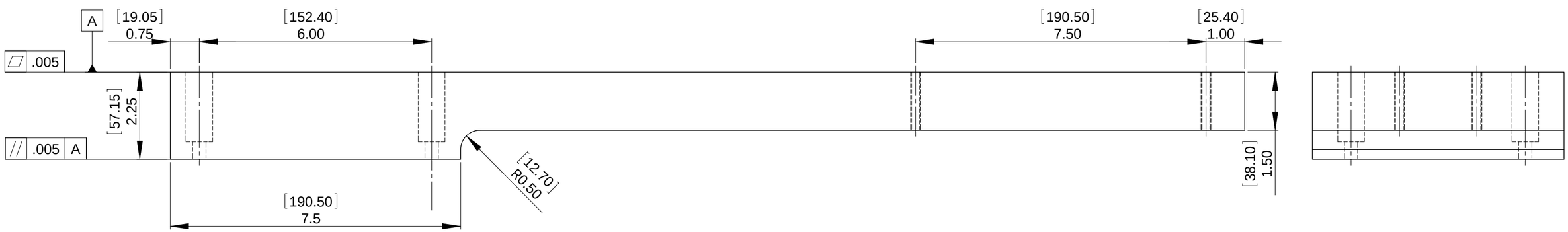

NOTE

1. PART TO BE BLACK ANODIZED: NO HARD COAT.
2. PRIOR SHIPPING, ALL SURFACES ARE TO BE THOROUGHLY CLEANED AND FREE OF ALL OIL OR SOLUTIONS

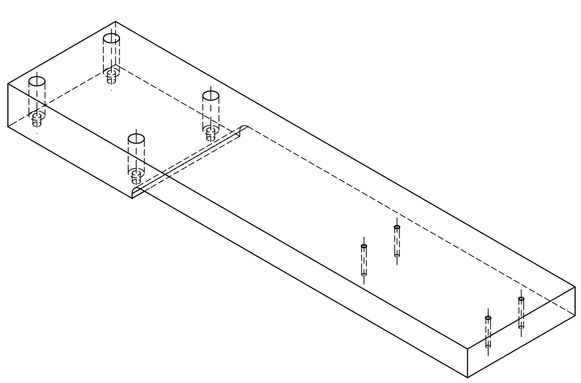

SCALE (1:5)

PARTS LIST / BILL OF MATERIALS

UNLESS OTHERWISE SPECIFIED:
1. ALL DIMENSIONS ARE IN INCHES.
2. DIMENSIONS IN [ ] ARE MILLIMETERS AND ARE REFERENCE ONLY.

TOLERANCES:
DECIMAL: X.X ± 0.030 [0.762]; X.XX ± 0.010 [0.251]; X.XXX ± 0.005 [0.127]
ANGULAR: ±0.25°
SURFACE ROUGHNESS: 125

REMOVE ALL BURS AND BREAK SHARP EDGES 0.03 MAX
SURFACE TEXTURE TO BE IN ACCORDANCE WITH LATEST ANSI B46.1
DIMENSIONING & TOLERANCING IN ACCORDANCE WITH LATEST ASME Y14.5M

MODEL NAME:
ELECTRONIC FINE NAME:

DRAWN BY: SOONHONG LEE	DATE: 06/08/09	**SKETCH - MED**
CHECKED BY:	DATE:	
DESIGNED BY: SOONHONG LEE	DATE: 06/08/09	TITLE: X-RAY SCIENCE DIVISION USER BEAMLINE DOCUMENTATION USER BEAMLINE SECTOR 8 ID GISAXS EXPERIMENT SYSTEM
RESPONSIBLE ENGINEER: SOONHONG LEE	DATE: 06/08/09	
GROUP LEADER: PAT DEN HARTOG	DATE:	
APPROVED BY: SURESH NARAYANAN	DATE:	FLIGHT PATH SUPPORT
RELEASE LEVEL: PENDING	MODEL VER: / DRAW VER:	SIZE: C / DRAWING NUMBER: S-4308-460001 / REV: 01
MATERIAL: ALUM. 2024-T4 or 6061-T6		SCALE: 1:2 / DO NOT SCALE DRAWING / WEIGHT: kg / SHEET 1 OF 1