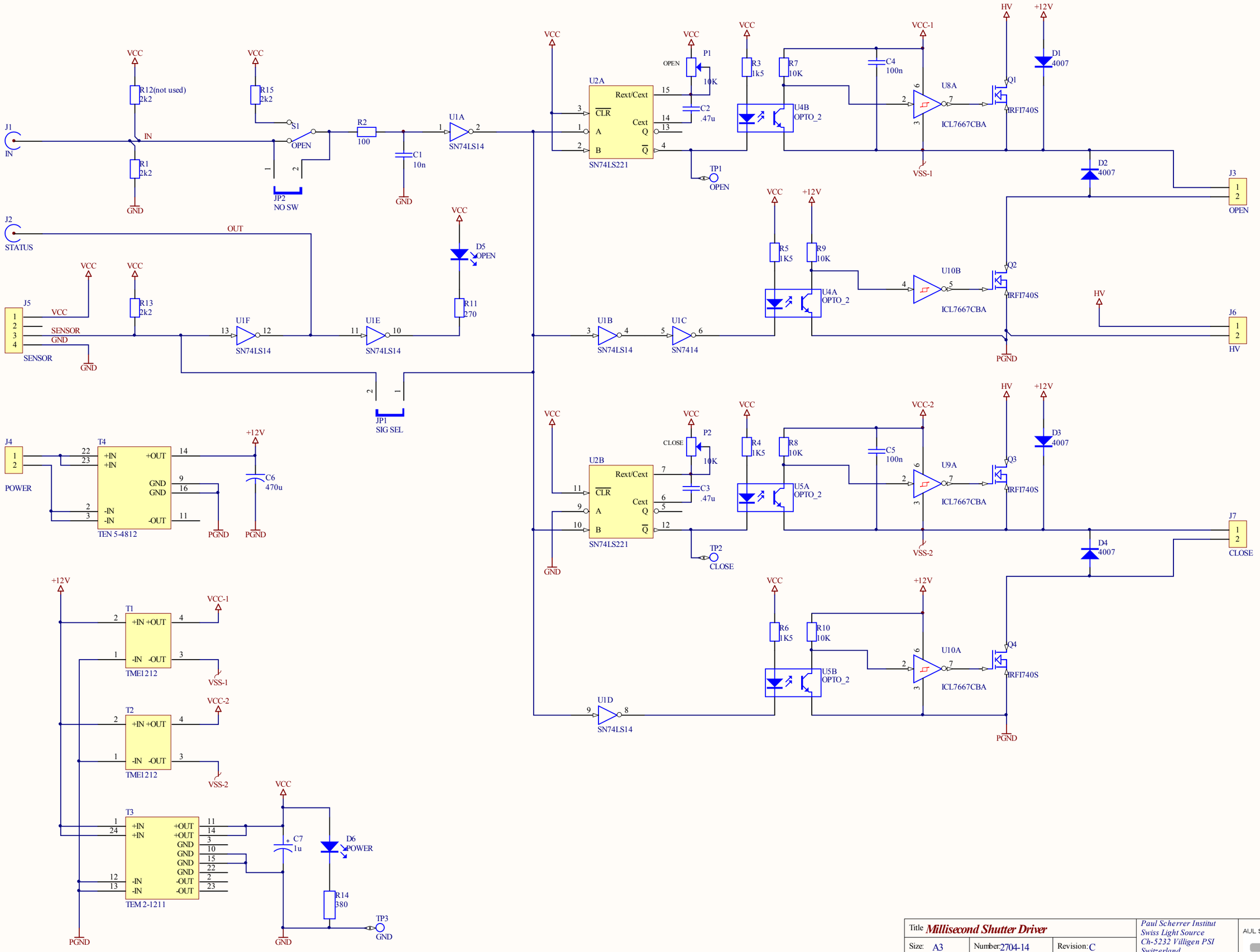

Not for public use document of Paul Scherrer Institut, CH 5232 Villigen PSI. Unauthorized use and reproduction is prohibited.

Title	*Millisecond Shutter Driver*		*Paul Scherrer Institut Swiss Light Source Ch-5232 Villigen PSI Switzerland*
Size: A3	Number: 2704-14	Revision: C	
Date: 09/11/2011	Time: 15:24:35	Sheet 1 of 1	
File: L:\Projects\2004 Shutter\PCB_Project\bladeshutter\2004 REV D\Millisecond shutter driver 4.sch			

AUL SCHERRER INSTITUT